City of Elkhart

Mayor Tim Neese

STANDARD SPECIFICATIONS FOR CONSTRUCTION

CITY OF ELKHART, INDIANA

PUBLIC WORKS AND UTILITIES

March 2016

STANDARD SPECIFICATIONS FOR CONSTRUCTION

CITY OF ELKHART, INDIANA

The attached specifications for all water, storm and sanitary sewer, traffic signalization, street pavement, construction, and other Public Works & Utilities projects are hereby in effect and part of all present and future construction.

Approved by the Board of Public Works this 1ST day of MARCH, 2016.

Carol McDowell President	Michael Machlan Vice-President	Arvis Dawson Member
Ronnie Davis Member	Chad Crabtree Member	

Disclaimer: The information contained in this document has been approved and published by the Board of Public Works of the City of Elkhart, Indiana (the "City"), a municipal corporation, for the exclusive use on public works projects authorized by the City's Board of Public Works (the "Board") by any individuals or organizations with an interest in those public works projects (the "Recipient"). This document contains the most current approved version of the City's Standard Construction Specifications (the "Standard Specifications") as of the date shown on the cover page of this document. Neither the City, nor any of its boards, commissions, officials or employees warrant, directly or indirectly, the use of this document on projects proposed or being constructed in the unincorporated parts of Elkhart County, Indiana unless expressly authorized by the Board. The Recipient's use of any part of the Standard Specifications shall not be construed as approval by the City or its licensed professional of any plans, specifications, or any portion thereof. The Recipient shall be fully responsible for having any plans and specifications reviewed, verified, approved and sealed by a licensed engineer or other applicable professional, as required by the laws of the State of Indiana. Portions of this document include the intellectual property of the City and may not be resold or used in marketing materials by the Recipient without the express consent of the Board. The Recipient shall not modify, edit or alter in any way the information contained in this document. The Recipient is responsible for verifying and obtaining the most up-to-date version of the Standard Specifications at the time the construction of the public works project commences.

STANDARD SPECIFICATIONS FOR CONSTRUCTION

CITY OF ELKHART, INDIANA

TABLE OF CONTENTS

Division A - General Conditions

1. Definitions
2. Instructions to Bidders
3. Preliminary Matters
4. Contract Documents: Intent, Amending and Reuse
5. Availability of lands; Hazardous Environmental Conditions; Reference Points; Utilities and Structures
6. Bonds and Insurance
7. Contractor's Responsibilities
8. Other Work at the Site
9. City's Responsibilities
10. Engineer's Status during Construction
11. Changes in the Work
12. Unit Price Work
13. Tests and Inspections; Correction, Removal or Acceptance of Defective Work
14. Payments to Contractor and Completion
15. Suspension of Work and Termination
16. Miscellaneous
17. Federal and State Requirements

Division B - Construction Specifications

1. Site Preparation
2. Stormwater Pollution Prevention and Erosion Control
3. Removals
4. Water Construction
5. Sewer Construction
6. Pavements
7. Miscellaneous Construction
8. Traffic Control Devices and Lighting
9. Landscape
10. Testing
11. Record Drawings

Division C - Standard Drawings

Division A - General Conditions

1. Definitions
2. Instructions to Bidders
3. Preliminary Matters
4. Contract Documents: Intent, Amending and Reuse
5. Availability of lands; Hazardous Environmental Conditions; Reference Points; Utilities and Structures
6. Bonds and Insurance
7. Contractor’s Responsibilities
8. Other Work at the Site
9. City’s Responsibilities
10. Engineer’s Status during Construction
11. Changes in the Work
12. Unit Price Work
13. Tests and Inspections; Correction, Removal or Acceptance of Defective Work
14. Payments to Contractor and Completion
15. Suspension of Work and Termination
16. Miscellaneous
17. Federal and State Requirements

1. Definitions

Wherever used in the Bidding Requirements or Contract Documents and printed with initial capital letters, the terms listed below will have the meanings indicated which are applicable to both the singular and plural thereof. In addition to terms specifically defined, terms with initial capital letters in the Contract Documents include references to identified sections, and the titles of other documents or forms. Unless stated otherwise in the Contract Documents, words or phrases which have a well-known technical or construction industry or trade meaning are used in the Contract Documents in accordance with such recognized meaning.

1.1. Addendum – Written or graphic instruments issued prior to the opening of Bids which clarify, correct, or change the Bidding Requirements or the proposed Contract Documents.

1.2 Agreement – The written instrument which is evidence of the agreement between Owner and Contractor covering the Work.

1.3 Application for Payment – The form created by the Engineer which is to be used by Contractor during the course of the Work in requesting progress or final payments and which is to be accompanied by such supporting documentation as is required by the Contract Documents.

1.4 Bid – The offer or proposal of a Bidder submitted on the prescribed form setting forth the prices for the Work to be performed.

1.5 Bidder – The individual or entity who submits a Bid directly to the City.

1.6 Bidding Documents – The Advertisement or Invitation to Bid, Instructions to Bidders, Bid Bond, Certified Bid Summary Form, any plans and specifications and other forms and the proposed Contract Documents (including all Addendums).

1.7 Board - Board of Public Works of the City of Elkhart, Indiana or its authorized agents.

1.8 City - The government of the City of Elkhart, Indiana or its authorized agents.

1.9 Change Order – A document recommended by Engineer which is signed by Contractor and the City and authorizes an addition, deletion, or revision in the Work or an adjustment in the Contract Price or the Contract Times, issued on or after the Effective Date of the Agreement.

1.10 Contract – The entire and integrated written agreement between the City and Contractor concerning the Work. The Contract supersedes prior negotiations, representations, or agreements, whether written or oral.

1.11 Contract Documents – Those items so designated in the Agreement. Only printed or hard copies of the items listed in the Agreement are Contract Documents. Approved Shop Drawings, other Contractor's submittals, and the reports and drawings of subsurface and physical conditions are not Contract Documents.

1.12 Contract Price – The moneys payable by the City to the Contractor for completion of the Work in accordance with the Contract Documents as stated in the Agreement

1.13 Contract Times – The number of days or the dates stated in the Agreement to: (i) achieve Milestones, if any, (ii) achieve Substantial Completion, if designated; and (iii) complete the Work so that it is ready for final payment as evidenced by Engineer's written recommendation of final payment.

1.14 Contractor - The individual or entity with whom the City has entered into an Agreement or his or her heirs, executors, administrators, assigns or successors. The Contractor must perform fifteen percent (15%) or more of the total contract price with Contractor's own labor, services and/or materials.

1.15 Cost of the Work - See Division A Section 12.1 for definition.

1.16 Day - a calendar day of 24 hours measured from midnight to the next midnight.

1.17 Defective - when modifying the word "Work," refers to Work that is unsatisfactory, faulty, or deficient in that it:

1.17.1 does not conform to the Contract Documents;

1.17.2 does not meet the requirements of any applicable permits, inspection, reference standard, test, or approval referred to in the Contract Documents; or

1.17.3 has been damaged prior to the Engineer's recommendation of final payment (unless responsibility for the protection thereof has been assumed by the City at Substantial Completion in accordance with Section 14.4).

1.18 Drawings – If any, the part of the Contract Documents prepared or approved by Engineer which graphically shows the scope, extent, and character of the Work to be performed by the Contractor. Shop Drawings and other Contractor submittals are not Drawings as so defined.

1.19 Effective Date of the Agreement – The date indicated in the Agreement on which it becomes effective, but if no such date is indicated, it means the date on which the Agreement is signed, by the City. The Effective Date shall be no more than 30 days after the Notice of Award.

1.20 Engineer - The City Engineer of Elkhart or his/her designee, acting within the authority assigned to them by the City Engineer.

1.21 Final Completion - the date when the Engineer has determined that: the Work is substantially completed, all punch list items have been completed, the Contractor has fulfilled all of its obligations under the Contract Documents; and the Engineer is prepared to recommend to the City the payment of the final Application for Payment.

1.22 Furnish - supply and deliver services, materials, or equipment to the Site (or some other specified location) ready for use or installation and in usable or operable condition.

1.23 Hazardous Environmental Condition – The presence at the Site of any material in such quantities or circumstances that may present a substantial danger to persons or property exposed thereto in connection with the Work.

1.24 Install - To put into use or place in final position services, materials, or equipment complete and ready for intended use.

1.25 Laws and Regulations; Laws or Regulations – Any and all applicable laws, rules, regulations, ordinances, codes, and orders of any and all governmental bodies, agencies, authorities, and courts having jurisdiction.

1.26 Liens – Charges, security interests, or encumbrances upon Project funds, real property, or personal property.

1.27 Milestone – A principal event specified in the Contract Documents relating to an intermediate completion date or time prior to Substantial Completion of all the Work.

1.28 Notice of Award – The written notice by the City to the Successful Bidder stating that upon timely compliance by the Successful Bidder with the conditions precedent listed therein, the City will sign and deliver the Agreement.

1.29 Notice to Proceed – A written notice given by the City to the Contractor fixing the date on which the Contract Times will commence to run and on which the Contractor shall start to perform the Work under the Contract Documents.

1.30 Perform - To furnish and install services, materials, or equipment complete and ready for intended use.

1.31 Project – The total construction of which the Work to be performed under the Contract Documents may be the whole, or a part.

1.32 Project Inspector- The individual that assists the Engineer in providing more

extensive observation of the Work.

1.33 Project Specifications – That part of the Contract Documents consisting of written requirements for materials, equipment, systems, standards and workmanship as applied to the Work, and certain administrative requirements and procedural matters applicable thereto.

1.34 Provide - See Perform.

1.35 Punch List - A summary of deficient items that remain to be corrected before the project will achieve final completion.

1.36 Public Right of Way - a general term signifying land, property, or interest therein, usually in a strip acquired for or devoted to public streets or alleys.

1.37 Registered Bidder - Potential Bidders that have officially registered with the City in order to receive plans and addenda.

1.38 Related Entity – An officer, director, partner, employee, agent, consultant, or subcontractor.

1.39 Samples – Physical examples of materials, equipment, or workmanship that are representative of some portion of the Work and which establish the standards by which such portion of the Work will be judged.

1.40 Schedule – A schedule prepared and maintained by Contractor, describing the sequence and duration of the activities comprising the Contractor's plan to accomplish the Work within the Contract Times.

1.41 Shop Drawings – All drawings, diagrams, illustrations, schedules, and other data or information which are specifically prepared or assembled by or for the Contractor and submitted by the Contractor to illustrate some portion of the Work.

1.42 Site – Lands or areas indicated in the Contract Documents as being furnished by the City upon which the Work is to be performed, including rights-of-way and easements for access thereto, and such other lands furnished by the City which are designated for the use of the Contractor.

1.43 Standard Specifications - the most current version of the City of Elkhart Standard Construction Specifications including the General Conditions, Construction Specifications, and Standard Drawings.

1.44 Subcontractor – An individual or entity having a direct contract with the Contractor or with any other Subcontractor for the performance of a part of the Work at the Site.

1.45 Substantial Completion – the date when the construction of a structure is sufficiently completed, in accordance with the plans and specifications, as modified by any complete change orders agreed to by the parties, so that it can be occupied for the use for which it was intended. This will only be used to determine payment of retainage.

1.46 Successful Bidder – The Bidder submitting a responsive Bid to whom the City makes an award; generally the lowest, responsive, responsible bidder.

1.47 Supplementary Conditions – That part of the Contract Documents which amends or supplements these General Conditions.

1.48 Supplier – A manufacturer, fabricator, supplier, distributor, materialman, or vendor having a direct contract with the Contractor or with any Subcontractor to furnish materials or equipment to be incorporated in the Work by the Contractor or any Subcontractor.

1.49 Tier 1 Contractor – The Contractor, as defined herein.

1.50 Tier 2 Subcontractor – An individual or entity that has a contract to provide work, materials and/or services to the Tier 1 Contractor.

1.51 Tier 3 Sub-subcontractor – An individual or entity that has a contract to provide work, materials and/or services to a Tier 2 Subcontractor.

1.52 Tier 4 Lower tier contractor - An individual or entity that has a contract to provide work, materials and/or services to a Tier 3 Sub-subcontractor.

1.53 Underground Facilities – All underground pipelines, conduits, ducts, cables, wires, manholes, vaults, tanks, tunnels, or other such facilities or attachments, and any encasements containing such facilities, including those that convey electricity, gases, steam, liquid petroleum products, telephone or other communications, cable television, water, wastewater, storm water, other liquids or chemicals, or traffic or other control systems.

1.54 Unit Price Work – Work to be paid for on the basis of unit prices.

1.55 Utility Easement - any rights to access land not owned or controlled by the City of Elkhart that is established, acquired, dedicated or devoted to public utility purposes, including the area above and below such easement.

1.56 Work - all parts of construction required to complete the project and fulfill all Contract obligations.

2. INSTRUCTIONS TO BIDDERS

2.1 Copies of Bidding Documents

2.1.1 Complete sets of the Bidding Documents in the number and for the purchase sum, if any, stated in the advertisement or invitation to bid may be obtained from the issuing office.

2.1.2 Complete sets of Bidding Documents shall be used in preparing Bids; neither the City nor the Engineer assumes any responsibility for errors or misinterpretations resulting from the use of incomplete sets of Bidding Documents.

2.2 Qualifications of Bidders

2.2.1 The Board of Public Works may reject any Bid as not responsible from any person, firm, or corporation, that is in arrears to the City upon any debt or contract, or who has failed to execute in whole or in part, in a satisfactory manner, any Contract with the City; or who is in default as to surety or otherwise upon any obligation to the City.

2.2.2 Persons, firms or corporations submitting proposals shall demonstrate to the satisfaction of the Board of Public Works, that they have the proper equipment, expert laborers, and experience to execute the Contract in a proper manner; otherwise their bid will be rejected.

2.2.3 If required, the Bidder shall demonstrate qualifications to perform the Work, within 14 days of the City's request, Bidder shall submit written evidence such as financial data, previous experience, present commitments, and such other data as may be required in the Bidding documents.

2.3 Examination of Bidding Documents, Other Related Data, and Site

2.3.1 It is the responsibility of each Bidder before submitting a Bid to:

(a) to register with the City.

(b) Examine and carefully study the Bidding Documents, and the other related data identified in the Bidding Documents;

(c) Visit the Site and become familiar with and satisfy the Bidder as to the general, local, and Site conditions that may affect cost, progress, and performance of the Work;

(d) Conduct such examinations, investigations, explorations, tests and studies as the Bidder deems necessary for submission of a Bid. Bidder shall fill all holes and clean up and restore the Site to its former condition upon completion of such explorations, investigations, tests and studies. The

Bidder shall comply with all applicable Laws and Regulations relative to excavation and utility locates;

(e) Become familiar with all federal, state, and local Laws and Regulations and permits that may affect cost, progress, and performance of the Work;

(f) Consider the information commonly known to contractors doing business of this type;

(g) Agree at the time of submitting its Bid that no further examinations, investigations, explorations, tests, studies, or data are necessary for the determination of its Bid for performance of the Work at the prices bid and within the times required, and in accordance with the other terms and conditions of the Bidding Documents;

(h) Promptly give the Engineer written notice of all conflicts, errors, ambiguities, or discrepancies that Bidder discovers in the Bidding Documents and confirm that the written resolution thereof by the Engineer is acceptable to Bidder; and

(i) Determine that the Bidding Documents are generally sufficient to indicate and convey understanding of all terms and conditions for the performance of the Work.

2.3.3 Underground Facilities

Information and data shown or indicated in the Bidding Documents with respect to existing Underground Facilities at or contiguous to the Site is based upon information and data furnished to City and Engineer by owners of such Underground Facilities, including the City, or others. The City and Engineer shall not be responsible for the accuracy or completeness of any such information or data.

2.3.4 Elevations

The elevations shown on any plans or profiles accompanying the Contract documents are reasonably correct but are not guaranteed to be absolutely so and together with any schedule of quantities, are to be used as basis of estimate. All elevations indicated or specified refer to North American Vertical Datum 1988 (NAVD88), GEOID99, CONTUS, spheroid WGS84 of the United States Coast and Geodetic Survey and are expressed in feet and decimal parts thereof, or in feet and inches. All mapping shall be in Indiana State Plane Coordinate System (SPCS), Indiana East, FIPS 1301, NAD83 coordinate system.

2.4 Verbal Agreements

No verbal agreement, understanding, or conversation with an agent or employee of the City, either before or after the execution of the Contract, shall effect or modify any of the terms or obligations herein contained.

2.5 Pre-Bid Conference

If a pre-bid conference is held, the Engineer will be present to discuss the Project. Bidders are encouraged to attend and participate in the conference unless otherwise noted in the Bid documents. .The Engineer will transmit to all Registered Bidders such Addenda as Engineer considers necessary in response to questions arising at the conference. Oral statements may not be relied upon and will not be binding or legally effective.

2.6 Site and Other Areas

The Site is identified in the Bidding Documents. Easements for permanent structures or permanent changes in existing facilities are to be obtained and paid for by the City unless otherwise provided in the Bidding Documents. All additional lands and access thereto required for temporary construction facilities, construction equipment, or storage of materials and equipment to be incorporated in the Work are to be obtained and paid for by the Contractor.

2.7 Interpretations and Addenda

2.7.1 All questions about the meaning or intent of the Bidding Documents are to be submitted to the Engineer in writing. Interpretations or clarifications considered necessary by the Engineer in response to such questions will be issued by Addenda mailed or delivered to registered bidders. Only questions answered by Addenda will be binding. Oral and other interpretations or clarifications will be without legal effect.

2.7.2 In case of any actual or alleged disagreement or discrepancy between the Contract Documents, these specifications and the plans for the Work on, the language and provisions of the Contract shall take precedence and prevail; and the Engineer shall determine in each case whether the specifications or the plans shall be followed.

2.7.3 Notification of Changes

The City acknowledges responsibility to advise all plan holders, whom are documented or registered with the City, of any changes up to the time of bid opening. The City accepts no responsibility to notify non-registered or second-party plan holders of any changes.

2.8 Payment of Wages and Wage Rates

The Contractor is prohibited from paying employees in cash. For federally funded projects, the successful bidder must comply with the determination of the prevailing scale of wages made in connection with this project in accordance with the Davis-Bacon Act.

2.9 Disadvantaged Business Enterprise

The Bidder shall take affirmative steps to assure that qualified small businesses, minority owned businesses and businesses owned by women are used when possible as sources of supplies, equipment, construction, and services. The Bidder shall take affirmative steps to use the services of the Small Business Administration, the Women Business Enterprise, and the Offices of Minority Business Enterprise of the U.S. Department of Commerce.

2.10 Nondiscrimination

In compliance with Indiana Code 22-9-1-10, the Bidder hereby agrees:

2.10.1 That in the hiring of employees for the performance of work under the Contract or any subcontract hereunder, no Contractor, Subcontractor nor any person acting on behalf of such Contractor, shall by reason of race, age, religion, color, sex, national origin or ancestry, or disability, discriminate against any person who is qualified and available to perform the work to which the employment relate.

2.10.2 That no Contractor, subcontractor, nor any person on the Contractor's behalf, shall, in any manner, with respect to tenure, terms, conditions or privileges of employment, or any other matter directly or indirectly related to employment, discriminate against or intimidate any employee hired for the performance of work under the Contract on account of race, age, religion, color, sex, national origin or ancestry, or disability;

2.10.3 That the Contract may be canceled or terminated by the City and all money due or to become due hereunder may be forfeited for a second or any subsequent violation of the terms or conditions of this section of the Contract.

2.11 Buy American

The Bidder agrees that preference will be given to domestic construction material and domestically made and assembled equipment by the Bidder, subcontractor, and suppliers in the performance of the Contract.

2.12 U.S.A. Made Steel and Foundry Products

Only U.S.A. made steel and foundry products shall be used in all Public Works projects in compliance with Public Law 6 – Senate Enrolled Act 96 (Effective July 1, 2007) and United States Steel or Foundry Products – Amends IC5-16-8.

2.13 Recycled Product Procurement

The Bidder agrees that procurement preference, pursuant to Indiana Code 5-17-6 and City policy will be given for any product which is at least 50% composed of recycled material. The Bidder shall purchase recycled products whenever sufficient quantities are readily available and meet or exceed the City's specifications.

2.14 Bid Security

2.14.1 A Bid must be accompanied by Bid security made payable to City in an amount of five percent of the Bidder's maximum Bid price, but not less than $1000. Bid security may be in the form of a certified check, bank money order, or a Bid bond issued by a surety meeting the requirements of Section 6 of the General Conditions.

2.14.2 The Bid security of the Successful Bidder will be retained until such Bidder has executed the Contract Documents, furnished the required contract security and met the other conditions of the Notice of Award, whereupon the Bid security will be returned. If the Successful Bidder fails to execute and deliver the Contract Documents and furnish the required contract security within 15 days after the Notice of Award, City may consider the Bidder to be in default, annul the Notice of Award, and the Bid security of that Bidder will be forfeited. Such forfeiture shall be City's exclusive remedy if Bidder defaults.

2.14.3 The Bid security of other Bidders whom the City believes to have a reasonable chance of receiving the award may be retained by the City until the earlier of seven days after the Effective Date of the Agreement or 61 days after the Bid opening, whereupon Bid security furnished by such Bidders will be returned.

2.14.4 Bid security of other Bidders whom the City believes do not have a reasonable chance of receiving the award will be returned within seven days after the Bid opening.

2.15 Contract Times

The number of calendar days within which, or the dates by which, the Work is to be fully completed and ready for final payment are set forth in the Agreement.

2.16 Retainage

Provisions concerning retainage are set forth in the Agreement.

2.17 Liquidated Damages

Provisions for liquidated damages, if any, are set forth in the Agreement.

2.18 Substitute and "Or-Equal" Items

The Contract, if awarded, will be on the basis of materials and equipment specified or described in the Bidding Documents. Whenever it is specified or described in the Bidding Documents that a substitute or "or-equal" item of material or equipment may be furnished or used by Contractor it must be approved by the Engineer.

2.19 Subcontractors, Suppliers and Others

2.19.1 If the Supplementary Conditions require the identity of certain Subcontractors, Suppliers, individuals, or entities to be submitted to the City in advance of a specified date prior to the Effective Date of the Agreement, the apparent Successful Bidder, and any other Bidder so requested, shall within five days after Bid opening, submit to the City a list of all such Subcontractors, Suppliers, individuals, or entities proposed for those portions of the Work for which such identification is required. Such list shall be accompanied by an experience statement with pertinent information regarding similar projects and other evidence of qualification for each such Subcontractor, Supplier, individual, or entity if requested by the City. If the City or Engineer, after due investigation, has reasonable objection to any proposed Subcontractor, Supplier, individual, or entity, the City may, before the Notice of Award is given, request apparent Successful Bidder to submit a substitute, without an increase in the Bid.

2.19.2 If apparent Successful Bidder declines to make any such substitution, the City may award the Contract to the next lowest Bidder that proposes to use acceptable Subcontractors, Suppliers, individuals, or entities. Declining to make requested substitutions will not constitute grounds for forfeiture of the Bid security of any Bidder. Any Subcontractor, Supplier, individual, or entity so listed and against which the City or the Engineer makes no written objection prior to the giving of the Notice of Award will be deemed acceptable to the City and the Engineer subject to revocation of such acceptance after the Effective Date of the Agreement as provided in Division A Section 7.5.

2.19.3 Contractor shall not be required to employ any Subcontractor, Supplier, individual, or entity against whom Contractor has reasonable objection.

2.20 Preparation of Bid; Basis of Bid; and Submittal of Bid

2.20.1 <u>Preparation of Bid:</u>

(a) The Bid Form is included with the Bidding Documents

All blanks on the Bid Form shall be completed in ink and the Bid Form signed in ink. Erasures or alterations shall be initialed in ink by the person signing the Bid Form. A Bid price shall be indicated for each listed

therein. In the case of optional alternatives the words *"No Bid," "No Change,"* or "Not Applicable" may be entered.

(b) A Bid by a corporation shall be executed in the corporate name by the president or a vice-president or other corporate officer accompanied by evidence of authority to sign. The corporate seal shall be affixed and attested by the secretary or an assistant secretary. The corporate address and state of incorporation shall be shown.

(c) A Bid by a partnership shall be executed in the partnership name and signed by a partner (whose title must appear under the signature), accompanied by evidence of authority to sign. The official address of the partnership shall be shown.

(d) A Bid by a limited liability company shall be executed in the name of the firm by a member and accompanied by evidence of authority to sign. The state of formation of the firm and the official address of the firm shall be shown.

(e) A Bid by an individual shall show the Bidder's name and official address.

(f) A Bid by a joint venture shall be executed by each joint venturer in the manner indicated on the Bid Form. The official address of the joint venture shall be shown.

(g) A Bid by a trust shall be executed in the name of the trustee and signed by the trustee. A bid submitted by a trust must identify each: (1) beneficiary of the trust; and (2) settlor empowered to revoke or modify the trust. The official address of the trustee shall be shown.

(h) All names shall be printed in ink below the signatures**.**

(i) The Bid shall contain an acknowledgment of receipt of all Addenda, the numbers of which shall be filled in on the Bid Form.

(j) Postal and e-mail addresses and telephone number for communications regarding the Bid shall be shown.

(k) The Bid shall contain evidence of Bidder's authority and qualification to do business in the state where the Project is located, or Bidder shall covenant in writing to obtain such authority and qualification prior to award of the Contract and attach such covenant to the Bid. Bidder's state contractor license number, if any, shall also be shown on the Bid Form.

2.20.2 <u>Basis of Bid:</u>

(a) Bidders shall submit a Bid on a unit price basis for each item of Work listed in the Itemized Proposal.

(b) The total of all estimated prices will be the sum of the products of the estimated quantity of each item and the corresponding unit price. The final quantities and Contract Price will be determined in accordance with Division A Section 11.3.

(c) Discrepancies between the multiplication of units of Work and unit prices will be resolved in favor of the unit prices. Discrepancies between the indicated sum of any column of figures and the correct sum thereof will be resolved in favor of the correct sum.

2.20.3 Submittal of Bid:

A Bid shall be submitted no later than the date and time prescribed and at the place indicated in the advertisement or invitation to bid and shall be enclosed in a plainly marked package with the Project title (and, if applicable, the designated portion of the Project for which the Bid is submitted), the name and address of the Bidder, and shall be accompanied by the Bid security and other required documents. If a Bid is sent by mail or other delivery system, the sealed envelope containing the Bid shall be enclosed in a separate package plainly marked on the outside with the notation "BID ENCLOSED." A mailed Bid shall be addressed to the Clerk of the Board of Public Works unless otherwise stated in the Legal Advertisement. LB

2.20.4 Additional Forms*:*

The following forms shall be included in the Bid:

(a) Certified Bid Summary Form
Each bid shall include a Certified Bid Summary Form. All items included in the bid shall be checked off and the base bid amount, alternative amounts if applicable, and total bid shall be filled in. The bidder's signature, name, and address shall be filled in. The Certified Bid Summary Form shall be placed as the first sheet on top of the submitted bid package.

(b) Financial Statement
Each bid in the total amount of $100,000.00 or more shall be accompanied by a Financial Statement of the Bidder.

(c) Non-Collusion Affidavit
All proposals shall be filed on the latest revision of State Board of Accounts Form 96, as required, which include the non-collusion affidavit, and shall be properly executed. Each bidder is required to file an affidavit that such bidder has not entered into any combination or agreement relative to the price to be bid by a person, to prevent a person from bidding or to induce a person to refrain from bidding and that such bid is made without reference to any other bid.

(d) (For contracts AWARDED after June 30, 2016) Each Contractor in each Tier must be qualified by the Indiana Department of Administration or the Indiana Department of Transportation before doing any work covered by this Contract.

(e) E-Verify Affidavit
The Bidder shall fill out and include the Employment Verification Affidavit. By submitting a bid, the Bidder is agreeing to comply with all E-Verify requirements outlined below and on the Affidavit should they be awarded the project.

(f) Investments in Iran Affidavit
The Bidder acknowledges that they do not engage in any investment activities with Iran, pursuant to Indiana Code 5-22-16.5 et seq. A signed acknowledgement of such statement shall be included with the Contract of the bidder awarded the project.

2.21 Modification and Withdrawal of Bid

2.21.1 A Bid may be modified or withdrawn by an appropriate document duly executed in the same manner that a Bid must be executed and delivered to the place where Bids are to be submitted prior to the date and time for the opening of Bids.

2.21.2 If within 24 hours after Bids are opened, any Bidder files a duly signed written notice with City and promptly thereafter demonstrates to the reasonable satisfaction of City that there was a material and substantial mistake in the preparation of its Bid, that Bidder may withdraw its Bid, and the Bid security will be returned.

2.22 Opening of Bids

Bids will be opened at the time and place indicated in the Advertisement or Invitation to Bid and, unless obviously non-responsive, read aloud publicly. An abstract of the amounts of the base Bids and major alternates, if any, will be made available to the Bidders as soon as practical after the opening of the Bids.

2.23 Bids to Remain Subject to Acceptance

All Bids will remain subject to acceptance for the period of time stated in the Bid Form, but the City may, in its sole discretion, release any Bid and return the Bid security prior to the end of this period.

2.24 Evaluation of Bids and Award of Contract

2.24.1 The City reserves the right to reject any or all Bids, including without limitation, nonconforming, nonresponsive, unbalanced, or conditional Bids. The City further reserves the right to reject the Bid of any Bidder whom it finds, after reasonable

inquiry and evaluation, to not be responsible. The City also reserves the right to waive all informalities not involving price, time, or changes in the Work.

2.24.2 More than one Bid for the same Work from an individual or entity under the same or different names will not be considered. Reasonable grounds for believing that any Bidder has an interest in more than one Bid for the Work may be cause for disqualification of that Bidder and the rejection of all Bids in which that Bidder has an interest.

2.24.3 In evaluating Bids, the City may consider a Bid unresponsive.

(a) In evaluating Bids, the City will consider whether or not the Bids comply with the prescribed requirements, and such alternates, unit prices and other data, as may be requested in the Bid Form or prior to the Notice of Award.

(b) In evaluating Bidders, the City will consider the qualifications of Bidders and may consider the qualifications and experience of Subcontractors, Suppliers, and other individuals or entities proposed for those portions of the Work for which the identity of Subcontractors, Suppliers, and other individuals or entities must be submitted as provided in the Supplementary Conditions.

(c) The City may conduct such investigations as the City deems necessary to establish the responsibility, qualifications, and financial ability of Bidders, proposed Subcontractors, Suppliers, individuals, or entities proposed for those portions of the Work in accordance with the Contract Documents.

2.25 Contract Security and Insurance

Division A Section 6, as may be modified by the Supplementary Conditions, sets forth the City's requirements as to performance and payment bonds and insurance. When the Successful Bidder delivers the executed Agreement to the City, it shall be accompanied by such bonds.

2.26 Signing of Agreement

The Bidder to whom the award is made shall be required to execute a written Contract, hereinafter referred to as the "Contract", and to furnish good and approved performance and payment bonds as herein specified, within 15 days after being notified of the acceptance of the bid. If the bidder to whom the first award is made fails to enter into a Contract, as herein provided, the award may be annulled and the Contract let to the next highest bidder who is responsive and responsible in the opinion of the City of and such Bidder shall fulfill every stipulation embraced herein as if the bidder were the original party to whom the award is made.

2.27 Sales and Use Taxes

The City is exempt from Indiana state sales and use taxes on materials and equipment to be incorporated in the Work. Said taxes shall not be included in the Bid. Refer to Division A Section 7.9 for additional information.

3.0 PRELIMINARY MATTERS

3.1 Delivery of Bonds and Evidence of Insurance

3.1.1 When the Contractor delivers the executed counterparts of the Agreement to the City, the Contractor shall also deliver to the City such bonds and insurance documentation as the Contractor may be required to furnish.

3.1.2 Evidence of Insurance

Before any Work at the Site is started, the Contractor shall deliver copies of certificates of insurance which the Contractor is required to purchase and maintain in accordance with Division A Section 6.

3.2 Copies of Documents

The City shall furnish to the Contractor, upon request, up to five printed or hard copies of the Drawings and Project Specifications. Additional copies will be furnished upon request at the cost of reproduction.

3.3 Commencement of Contract Times; Notice to Proceed

The Contract Times will commence to run on the 30th day after the Effective Date of the Agreement or, if a Notice to Proceed is given, on the day indicated in the Notice to Proceed.

3.4 Starting the Work

The Contractor shall start to perform the Work on the date when the Contract Times commence to run. No Work shall be done at the Site prior to the date on which the Contract Times commence to run without the written permission of the Engineer.

3.5 Before Starting Construction

3.5.1 Schedules

(a) Within 10 days after the Effective Date of the Agreement (unless otherwise specified in the Project Specifications), the Contractor shall submit to the Engineer for timely review and acceptance a Progress Schedule indicating the times (numbers of days or dates) for starting and completing the various stages of the Work, including any Milestones specified in the Contract Documents.

(b) The Progress Schedule will be acceptable to the Engineer if it provides an orderly progression of the Work to Final Completion within the Contract Times. Such acceptance will not impose on the Engineer any responsibility for the Progress Schedule, for sequencing, scheduling, or progress of the

Work, nor interfere with or relieve the Contractor from the Contractor's full responsibility therefor.

3.5.2 Preconstruction Conference

Before any Work at the Site is started, a conference attended by the City, the Contractor the Engineer, all Sub-Contractors and others as appropriate will be held to establish a working understanding among the parties as to the Work and to discuss the Project

3.5.3 Construction Video

The Contractor shall provide the City a digital video recording of the construction site before construction begins and after construction is complete. This recording, which will become the property of the City, shall include all areas that could possibly be damaged either directly or indirectly before and during construction of the Work. The Work will not be considered complete for the purposes of Final Completion until after the video is delivered to the Engineer's office. All cost for this activity shall be merged into other bid items. Ensure that the video clearly shows the location (address, intersection, etc.) and any damaged areas adjacent to the Work.

3.5.4 Order and Progress of Work

The Work shall be performed in such a manner to ensure its completion within the Contract Times. When directed by the Engineer, the Contractor shall open for vehicular travel all completed portions of any pavement, but the public use of any completed portions of any pavement shall not be construed as an acceptance by the City of the Work. Once the Work has begun, under no circumstance shall the Contractor remove work crews from the Site for more than two consecutive business days, excluding delays caused by weather, without the written approval of the Engineer.

4.0 CONTRACT DOCUMENTS: INTENT, AMENDING, REUSE

4.1 Intent

4.1.1 All item comprising the Contract Documents are complementary; what is required by one is as binding as if required by all.

4.1.2 It is the intent of the Contract Documents to describe a functionally complete Project (or part thereof) to be constructed in accordance with the Contract Documents. Any labor, documentation, services, materials, or equipment that may reasonably be inferred from the Contract Documents or from prevailing custom or trade usage as being required to produce the intended result will be provided whether or not specifically called for at no additional cost to the City.

4.1.3 Clarifications and interpretations of the Contract Documents shall be issued by the Engineer as provided in Division A Section 10.

4.2 Reference Standards

4.2.1 Standards, Specifications, Codes, Laws, and Regulations

(a) Reference to standards, specifications, manuals, or codes of any technical society, organization, or association, or to Laws or Regulations, whether such reference be specific or by implication, shall mean the standard, specification, manual, code, or Laws or Regulations in effect at the time of opening of Bids (or on the Effective Date of the Agreement if there were no Bids), except as may be otherwise specifically stated in the Contract Documents.

(b) No provision of any such standard, specification, manual or code, or any instruction of a Supplier shall be effective to change the duties or responsibilities of the City, the Contractor, or the Engineer, or any of their subcontractors, consultants, agents, or employees from those set forth in the Contract Documents. No such provision or instruction shall be effective to assign to the City, or the Engineer, or any of, their Related Entities, any duty or authority to supervise or direct the performance of the Work or any duty or authority to undertake responsibility inconsistent with the provisions of the Contract Documents.

4.3 Reporting and Resolving Discrepancies

4.3.1 <u>Reporting Discrepancies</u>

(a) <u>The Contractor's Review of the Contract Documents before Starting the Work</u>: Before undertaking each part of the Work, Contractor shall carefully study and compare the Contract Documents and check and verify pertinent figures therein and all applicable field measurements. The Contractor shall promptly report in writing to the Engineer any conflict, error, ambiguity, or

discrepancy which the Contractor may discover and shall obtain a written interpretation or clarification from the Engineer before proceeding with any Work affected thereby.

(b) The Contractor's Review of Contract Documents During Performance of Work: If, during the performance of the Work, the Contractor discovers any conflict, error, ambiguity, or discrepancy within the Contract Documents or between the Contract Documents and any provision of any Law or Regulation applicable to the performance of the Work or of any standard, specification, manual or code, or of any instruction of any Supplier, the Contractor shall promptly report it to the Engineer in writing. The Contractor shall not proceed with the Work affected thereby (except in an emergency as required by Division A Section 7.14) until an amendment or supplement to the Contract Documents has been issued by one of the methods indicated in Division A Section 4.4.

4.3.2 Resolving Discrepancies

Except as may be otherwise specifically stated in the Contract Documents, the provisions of the Contract Documents shall take precedence in resolving any conflict, error, ambiguity, or discrepancy between the provisions of the Contract Documents and one of the following:

(a) the provisions of any standard, specification, manual, code, or instruction (whether or not specifically incorporated by reference in the Contract Documents); or

(b) the provisions of any Laws or Regulations applicable to the performance of the Work (unless such an interpretation of the provisions of the Contract Documents would result in violation of such Law or Regulation).

4.4 Amending and Supplementing Contract Documents

4.4.1 The Contract Documents may be amended to provide for additions, deletions, and revisions in the Work or to modify the terms and conditions thereof by a Change Order.

4.4.2 The requirements of the Contract Documents may be supplemented, and minor variations and deviations in the Work may be authorized by:

(a) Engineer's approval of a Shop Drawing or Sample; or

(b) Engineer's written interpretation or clarification.

4.5 Reuse of Documents

4.5.1 The Contractor and any Subcontractor or Supplier or other individual or entity performing or furnishing all of the Work under a direct or indirect contract with Contractor, shall not:

(a) have or acquire any title to or ownership rights in any of the Drawings, Specifications, or other documents (or copies of any thereof) prepared by or bearing the seal of the Engineer or consultants, including electronic media editions; or

(b) reuse any of such Drawings, Specifications, other documents, or copies thereof on extensions of the Project or any other project without written consent of the City and the Engineer.

(c) retain a license or control of any document or drawing submitted for the Work.

4.5.2 The prohibition of this Section 4.5 will survive final payment, or termination of the Contract. Nothing herein shall preclude the Contractor from retaining copies of the Contract Documents for record purposes.

4.6 Electronic Data

4.6.1 Copies of data furnished by the City or the Engineer to the Contractor or the Contractor to the City or the Engineer that may be relied upon are limited to the printed copies (also known as hard copies). Files in electronic media format of text, data, graphics, or other types are furnished only for the convenience of the receiving party. Any conclusion or information obtained or derived from such electronic files will be at the user's sole risk. If there is a discrepancy between the electronic files and the hard copies, the hard copies govern.

5. AVAILABILITY OF LANDS; HAZARDOUS ENVIRONMENTAL CONDITIONS; REFERENCE POINTS; UTILITIES AND STRUCTURES

5.1 Availability of Lands

5.1.1 The City shall furnish the Site. The City shall notify the Contractor of any encumbrances or restrictions not of general application but specifically related to use of the Site with which Contractor must comply in performing the Work. The City will obtain in a timely manner and pay for easements for permanent structures or permanent changes in existing facilities shown in the plans, if any.

5.1.2 The Contractor shall provide for all additional lands and access thereto that may be required for temporary construction facilities or storage of materials and equipment.

5.2 Underground Facilities

5.2.1 Shown or Indicated

The information and data shown or indicated in the Contract Documents with respect to existing Underground Facilities at or contiguous to the Site is based on information and data furnished to the City or the Engineer by the owners of such Underground Facilities, including the City, or by others. Unless it is otherwise expressly provided in the Supplementary Conditions:

(a) Refer to Division A Section 2.3.3 regarding the accuracy or completeness of any such information or data; and

(b) The cost of all of the following will be included in the Contract Price, and the Contractor shall have full responsibility for:

1. reviewing and checking all such information and data,

2. locating all Underground Facilities shown or indicated in the Contract Documents,

3. coordination of the Work with the owners of such Underground Facilities, including the City, during construction, and

4. the safety and protection of all such Underground Facilities and repairing any damage thereto resulting from the Work.

5.2.2 Not Shown or Indicated

(a) If an Underground Facility is uncovered or revealed at or contiguous to the Site which was not shown or indicated, or not shown or indicated with reasonable accuracy in the Contract Documents, the Contractor shall, promptly after becoming aware thereof and before further disturbing conditions affected thereby or performing any Work in connection

therewith (except in an emergency as required by Division A Section 7.14), identify the owner of such Underground Facility and give written notice to that owner and to the City and the Engineer. The Engineer will promptly review the Underground Facility and determine the extent, if any, to which a change is required in the Contract Documents to reflect and document the consequences of the existence or location of the Underground Facility. During such time, the Contractor shall be responsible for the safety and protection of such Underground Facility.

(b) If the Engineer concludes that a change in the Contract Documents is required, a Change Order will be issued to reflect and document such consequences.

5.3 Cooperation with Public and Privately Owned Utilities

5.3.1 The Contractor shall review and understand the provisions of Section 105.06 of the Indiana Department of Transportation (INDOT) Standard Specifications. In the event a permit or permits are approved by the City or County for the installation of utility structures, conduits, lines or appurtenances as part of the Project , the Contractor shall (i) cooperate with the utility company making such installation, (ii) permit entry and (iii) allow reasonable time for the completion of the installation, permittee shall not damage or unnecessarily interfere with the Contractor's work, and shall be required to make suitable arrangements with the Contractor for all installations. The Contractor shall not be entitled to any additional compensation from the City for any delay or inconvenience caused by the installation of utilities facilities at the Site. Furthermore, the Contractor shall not be entitled to any additional compensation from the City for moving utility facilities owned by one or more of the City’s utilities, or owned by any public or private utility.

5.3.2 The Contractor shall be responsible for contacting the Indiana 811 System (800-382-5544) for utility locates and for contacting all other utility owners that are not a participant of the Indiana 811 System. The Contractor shall be responsible for determining the location of all overhead utility lines at the Site and to verify that the proper clearances, as specified by a utility are observed. Where conflicts occur, the Engineer shall determine the solution and their decision shall be final.

5.3.3 For the convenience of the Contractor, the following is a list of the owners of common utilities typically found within the area of construction. The Contractor is responsible for verifying the accuracy and completeness of this list.

GAS:	NIPSCO 1039 E. Pennsylvania Ave. P.O. Box 1355 South Bend, IN 46601 574-284-2278

ELECTRIC:	Indiana Michigan Power 3340 Old U.S. 20 E Elkhart, IN 46516 574-293-0661
SEWER & WATER:	Elkhart Public Works & Utilities 1201 South Nappanee Street Elkhart, IN 46516 574-293-2572
TRAFFIC:	Elkhart Traffic Division 2421 S. 17th Street Elkhart, IN 46516 574-522-2884
STATE HIGHWAY	Indiana Department of Transportation-Traffic Dept. 5333 Hatfield Rd. Fort Wayne, IN 46808 260-969-8235
TELEPHONE:	Frontier 24373 C.R. 45 Elkhart, IN 46516 574-875-3790
CABLE TELEVISION:	Comcast 4045 Edison Lakes Parkway Mishawaka, IN 46545 574-259-2112

5.4 Public Utilities and Private Structures:

5.4.1 The Contractor shall assume all risk and liability for any inconvenience, delay or expense that may be occasioned by public or private utilities within the limits of the proposed improvement, and shall do no work which may injure or damage such utilities until satisfactory arrangements have been completed with the owner for its protection, relocation or reconstruction.

5.4.2 The Contractor shall give notice to owners of facilities and for the utility owners to relocate or to protect their property.

5.4.3 At points where the Contractor's operations are adjacent to the properties of telecommunications companies and power companies or are adjacent to other property, damage to which might result in considerable expense to others, loss or inconvenience, the Work shall not be started until all arrangements necessary for the protection, relocation or reconstruction thereof have been completed.

5.4.4 The Contractor shall cooperate with the owners of any underground or overhead utility facilities in their removal, relocation or reconstruction operations in order that these operations may progress in a reasonable manner and that duplication of rearrangement may be reduced to a minimum and that services rendered by these parties shall not be unnecessarily interrupted.

5.4.5 In the event the Contractor interrupts any type of utility services while performing the work, whether the interruption results from accidental breakage or from being exposed or unsupported, the Contractor shall immediately notify the proper authority of the affected utility. He/she shall cooperate with the restoration of service as promptly as possible.

5.5 Reference Points

The City shall provide engineering surveys to establish reference points for construction which in the Engineer's judgment are necessary to enable the Contractor to proceed with the Work. The Contractor shall be responsible for laying out the Work, shall protect and preserve the established reference points and property monuments, and shall make no changes or relocations without the prior written approval of the City. The Contractor shall report to the Engineer whenever any reference point or property monument is lost or destroyed or requires relocation because of necessary changes in grades or locations, and shall be responsible for the accurate replacement or relocation of such reference points or property monuments by professionally qualified personnel.

5.6 Elevations

Refer to Division A Section 2.3.4

5.7 Hazardous Environmental Condition at the Site

5.7.1 The Contractor shall not be responsible for any Hazardous Environmental Condition uncovered or revealed at the Site which was not shown or indicated in Drawings or Specifications or identified in the Contract Documents to be within the scope of the Work. The Contractor shall be responsible for any Hazardous Environmental Condition created with any materials brought to the Site by the Contractor, Subcontractors, Suppliers, or anyone else for whom the Contractor is responsible.

5.7.2 If the Contractor encounters a Hazardous Environmental Condition or if the Contractor or anyone for whom the Contractor is responsible creates a Hazardous Environmental Condition, Contractor shall immediately: (i) secure or otherwise isolate such condition; (ii) stop all Work in connection with such condition and in any area affected thereby (except in an emergency as required by Division A Section 7.14); and (iii) notify the Engineer (and promptly thereafter confirm such notice in writing). The Engineer shall promptly retain a qualified expert to evaluate such condition or take corrective action, if any.

5.7.3 The Contractor shall not be required to resume the Work in connection with such condition or in any affected area until after the City has obtained any required permits related thereto and delivered to Contractor written notice: (i) specifying that such condition and any affected area is or has been rendered safe for the resumption of the Work; or (ii) specifying any special conditions under which the Work may be resumed safely.

6. BONDS AND INSURANCE

6.1 Performance, Payment, and Maintenance Bonds

The Contractor shall furnish the following performance, payment, and maintenance bonds:

6.1.1 Payment Bond

The Contractor shall execute and deliver a payment bond to the City on a form and from a surety company approved by the City. The payment bond shall be in an amount equal to the Contract Price, and provide for the payment of all indebtedness to a person for any labor and services performed, materials furnished or services rendered for the Project. The payment bond must state: (i) that it is for the benefit of all Subcontractors, laborers, Suppliers, and those performing services for the Project; and (ii) that the surety company shall not be discharged by a modification, omission, or addition to the terms and conditions of the Contract Documents; a defect in the Contract Documents; or a defect in the proceedings before the letting and awarding of the Contract. The payment bond shall be signed by a recognized surety company authorized to do business in the State of Indiana. The bond may not be released until one year after the date of the final payment to the Contractor.

6.1.2 Performance Bond

The Contractor shall execute and deliver a performance bond to the City on a form and from a surety company approved by the City. The performance bond shall be in an amount at least equal to the Contract Price, and be conditioned upon the faithful performance and completion of the Work according to the terms of the Contract. This bond shall be signed by a recognized surety company authorized to do business in the State of Indiana. The performance bond also shall provide that the surety company shall not be discharged by a modification, omission, or addition to the terms and conditions of the Contract Documents; a defect in the Contract Documents; or a defect in the proceedings before the letting and awarding of the Contract. The performance bond may not be released until one year after the date of the final payment to the Contractor.

6.1.3 Maintenance Bond

Within 10 days after the date of final acceptance of the Work, the Contractor shall provide the City with a maintenance bond in an amount equal to 30 percent of the Contract Price. The maintenance bond shall guarantee for a period of three years after the date of acceptance of the Work by the City that all workmanship and materials meet or exceed the requirements in the Contract Documents. The Contractor shall remove all defects due to faulty workmanship and/or materials and shall pay for any damage to other work resulting therefrom which appears within the guarantee period.

6.1.4 All bonds shall be in the form prescribed by the Contract Documents except as provided otherwise by Laws or Regulations, and shall be executed by such sureties

as are named in the current list of "Companies Holding Certificates of Authority as Acceptable Sureties on Federal Bonds and as Acceptable Reinsuring Companies" as published in Circular 570 (amended) by the Financial Management Service, Surety Bond Branch, U.S. Department of the Treasury. All bonds signed by an agent must be accompanied by a certified copy of the agent's authority to act.

6.1.5 If the surety on any bond furnished by Contractor is declared bankrupt or becomes insolvent or its right to do business is terminated in any state where any part of the Project is located or it ceases to meet the requirements of Division A Section 6.1.5, Contractor shall promptly notify City and shall, within 20 days after the event giving rise to such notification, provide another bond and surety, both of which shall comply with the requirements of Division A Section 6.1.5.

6.2 Contractor's Liability Insurance

6.2.1 Before commencing the Work, the Contractor shall purchase and maintain such liability and other insurance coverages and limits of liability as is appropriate for the Work being performed and as will protect the City and any other additional insureds, if applicable, from claims set forth below which may arise out of or result from the Contractor's performance of the Work and the Contractor's other obligations under the Contract Documents, whether it is to be performed by the Contractor, any Subcontractor or Supplier, or by anyone directly or indirectly employed by any of them to perform any of the Work, or by anyone for whose acts any of them may be liable:

(a) claims under workers' compensation, disability benefits, and other similar employee benefit acts;

(b) claims for damages because of bodily injury, occupational sickness or disease, or death of the Contractor's employees;

(c) claims for damages because of bodily injury, sickness or disease, or death of any person other than the Contractor's employees;

(d) claims for damages insured by reasonably available personal injury liability coverage which are sustained:

1. by any person as a result of an offense directly or indirectly related to the employment of such person by the Contractor, or

2. by any other person for any other reason;

(e) claims for damages, other than to the Work itself, because of injury to or destruction of tangible property wherever located, including loss of use resulting therefrom; and

(f) claims for damages because of bodily injury or death of any person or property damage arising out of the ownership, maintenance or use of any motor vehicle.

6.2.2 The policies of insurance required by Division A Section 6.2.1 shall:

(a) with respect to insurance required by Division A Sections 6.2.1(c) through 6.2.1(f) inclusive, include as additional insureds the City of Elkhart, the City of Elkhart Departments, Its Incorporations or Assigns and any other individual or entities identified in the Supplementary Conditions, all of whom shall be listed as additional insureds, and include coverage for the respective officials, officers, employees, agents, consultants and subcontractors of each and any of all such additional insureds, and the insurance afforded to these additional insureds shall provide primary coverage for all claims covered thereby;

1. (b) be from financially responsible insurance companies authorized to do business in the State of Indiana, have a general policyholder's rating of A^+, A, A^-, in the latest edition of Alfred M. Bests Insurance Reports, and be satisfactory in form and coverage to the City.

(c) contain a provision or endorsement that the coverage afforded will not be canceled, materially changed or renewal refused until at least 30 days prior written notice has been given to the City and the Contractor and to each other additional insured identified in the Supplementary Conditions to whom a certificate of insurance has been issued (and the certificates of insurance furnished by the Contractor pursuant to this section will so provide);

2. (d) remain in effect at least until final payment and at all times thereafter when the Contractor may be correcting, removing, or replacing defective Work in accordance with Division A Section 13.8; and

6.2.3 At a minimum, the Contractor shall provide the following type of coverages and limits of liability:

(a) Workers' Compensation and Occupational Disease Insurance in accordance with applicable state and federal laws, and Employer's Liability Insurance with a bodily injury per accident limit of liability of at least $ 1,000,000, bodily injury by disease limit for each employee of $1,000,000 and bodily injury by disease policy limit of $1,000,000, or such greater sum as may be reasonably required by the City.

(b) Commercial General Liability Insurance provided by ISO form CG 0001 with a combined bodily injury and property damage limit of at least $1,000,000 per occurrence, a products and completed operations aggregate of $2,000,000, a personal and advertising injury limit of $1,000,000 and a general aggregate of $2,000,000, or such greater sum as may be reasonably required by the City.

(1) Completed Operations and Products liability insurance shall be maintained for a period of 2-years after completion and acceptance of the Work by the City, or such longer period as may be reasonably required by the City.

(2) The above policy shall include an endorsement identifying the City and any other parties as may be reasonably required by the City, as additional insured. ISO endorsements CG 2010 10/01 or CG 2010 7/04 and CG 2037 10/01 or CG 2037 7/04 must be used to provide this coverage. Copies of the endorsements must be included with the certificate of insurance as required in Division A Section 6.2.9.

(3) Claims-Made coverage triggers are not acceptable to the City.

(4) ISO form CG2503, Designated Construction Project(s) General Aggregate Limit or an equivalent form must be endorsed to the policy and identified on the certificate of insurance. An Owners and Contractors Protective Liability policy can be utilized in lieu of aggregate limits per project.

(5) The policy shall not contain a sunset provision, commutation clause or any other provision which would prohibit the reporting of a claim and the subsequent defense and indemnity that would normally be provided by the policy.

(6) The policy shall not contain any provision, definition or endorsement which would serve to eliminate third party action over claims.

(c) Comprehensive Automobile Liability Insurance covering use of all owned, non-owned and hired vehicles with a bodily injury limit of at least $1,000,000 per person and per accident, a property damage limit of at least $1,000,000 per accident, or such greater sum as may be reasonably required by the City. This policy shall include coverage for the City, and any other parties as may be reasonably required by the City, for liability arising out of the actions of the Contractor, whether by endorsement or otherwise.

(d) Excess or Umbrella Liability Insurance in the amount of $5,000,000 per occurrence and in the aggregate, or such greater sum as may be reasonably required by the Owner. Such Excess/Umbrella policy shall be excess over the Employer's Liability, Commercial General Liability and Comprehensive Auto Liability policies and coverage shall be provided as Follow Form and shall name the City, and any other parties as may be reasonably required by the City, as additional insured.

(e) Pollution Liability in the amount of $2,000,000 per occurrence and in the aggregate or such sum as may be reasonably required by the City. This requirement applies if the Contractor's duties involve the use of, transportation, removal and/or disposal of hazardous materials and/or pollutants. This requirement applies to any disposal site receiving hazardous materials and/or pollutants. A copy of this policy must be made available upon request.

(f) Property and Equipment General Contractor shall purchase and maintain at its own discretion and expense, Builder's Risk/Installation Floater Insurance in an amount equal to the insurable value of the Contractor's property, whether off site or in transit, to cover any equipment, tools or tangible personal property. The Contractor assumes all liability and risks, and agrees to waive all claims against the City, for damage to or loss of equipment, machinery, tools, supplies and other tangible personal property owned or supplied by the Contractor and utilized or intended to be utilized during the course of the Work. Any insurance carried by the Contractor covering such damage or loss shall be endorsed with a waiver of subrogation in favor of the City and shall name the City as Additional Insured. All Subcontractors agree to assume the same liabilities and risks as the Contractor, and agree to name the City as additional insured on any such similar policies of insurance maintained by each of them.

6.2.4 Each of the Contractor's General Liability, Comprehensive Auto Liability, Pollution Liability, and Excess/Umbrella Liability policies must be endorsed as Primary and Non-Contributory as to any insurance maintained by the additional insured(s) and shown on the certificate of insurance.

6.2.5 Excess or Umbrella Liability Insurance limits cannot be used to satisfy the limit requirements for Employer's Liability, Commercial General Liability Comprehensive Automobile Liability and Pollution Liability.

6.2.6 An endorsement in favor of the additional insured(s) waiving the Contractor's and its insurer's rights of subrogation shall be issued with respect to the Commercial General Liability, Comprehensive Auto Liability, Pollution Liability, and Workers' Compensation and Employer's Liability policies. Evidence of this endorsement must be noted on the certificate of insurance.

6.2.7 Self-funded or other non-risk transfer insurance mechanisms or deductibles/self-insured retentions greater than $25,000 per occurrence are not acceptable to the City on any insurance coverage required in this Contract. If the Contractor has such a program, full disclosure must be made to the City prior commencement of the Work.

6.2.8 Any Subcontractor employed by the Contractor shall have equivalent coverage.

6.2.9 Before commencing any Work, the Contractor shall provide to the City a Certificate of Insurance, including copies of the Additional Insured endorsements, showing the above-stated coverages and limits as well as naming the City and all other individuals and entities identified in the Supplementary Conditions as additional insureds on all policies. All Certificates of Insurance shall be in form and content satisfactory and acceptable to the City and shall be submitted to the City in a timely manner so as to confirm the Contractor's full compliance with these insurance requirements stated herein.

6.2.10 The Contractor shall provide written notice to the City of any cancellation notice received by the Contractor from any insurer providing insurance as required in this Contract within two business days of the Contractor's receipt of such notice.

6.2.11 In the event that the Contractor commences the Work prior to the City receiving the required Certificate of Insurance, the City does not waive any of the insurance requirements herein specified imposed on the Contractor. Acceptance by the City of insurance submitted by the Contractor shall not relieve or decrease in any manner the liability of the Contractor for its performance under this Contract.

6.2.12 In the event the Contractor fails to obtain or maintain any of the foregoing required coverages, the City may purchase such coverage and charge the expense thereof to the Contractor, or may terminate this Contract.

6.2.13 The insurance provisions contained in this Division A Section 6.2 are intended to be a separate and distinct obligation on the part of the Contractor. Therefore, these provisions shall be enforceable and the Contractor shall be bound thereby regardless of whether or not the Indemnity provisions of this Contract are determined at any time to be enforceable in Elkhart County. The obligation of the Contractor to provide the insurance herein specified shall not limit in any way the liability or obligations assumed by the Contractor elsewhere in this Contract. Nothing contained herein shall modify the Contractor's obligation of indemnification and exculpation of the City.

6.2.14 In the event the Contractor or its insurance carrier(s) defaults on any obligations under Division A Section 6.2, the Contractor agrees that it will be liable for all expenses and attorney's fees incurred by the City in the enforcement of the terms of this Division A Section 6.2.

7. CONTRACTOR'S RESPONSIBILITIES

7.1 Supervision and Superintendence

7.1.1 The Contractor shall supervise, inspect, and direct the Work competently and efficiently, devoting such attention thereto and applying such skills and expertise as may be necessary to perform the Work in accordance with the Contract Documents. The Contractor shall be solely responsible for the means, methods, techniques, sequences, and procedures of construction.

7.1.2 At all times during the progress of the Work, the Contractor shall assign a competent resident superintendent who shall not be replaced without written notice to the Engineer except under extraordinary circumstances. The superintendent will be the Contractor's representative at the Site and shall have authority to act on behalf of the Contractor. All communications given to or received from the superintendent shall be binding on the Contractor.

7.2 Labor and Working Hours

7.2.1 The Contractor shall provide competent, suitably qualified personnel to survey and lay out the Work and perform construction as required by the Contract Documents. The Contractor shall at all times maintain good discipline and order at the Site.

7.2.2 The City may require the Contractor to remove from the Work any employee that the City or the Engineer deems incompetent, careless or insubordinate. Such employee shall not be employed, retained or allowed upon the Site. Any Supervisor or laborer who neglect or refuse to comply with the instructions of the Engineer shall not be re-employed on the Project without the written approval of the Engineer.

7.2.3 Except as otherwise required for the safety or protection of persons or the Work or property at the Site or area adjacent thereto, and except as otherwise stated in the Contract Documents, all Work at the Site shall be performed during the hours of 7:00 a.m. to 7:00 p.m.

7.2.4 The Contractor shall not permit the performance of Work on a Saturday, Sunday, or any legal holiday without the Engineer's written consent given after prior written notice to Engineer.

7.2.5 The Contractor shall follow all IOSHA regulations, including but not limited to, IOSHA regulation 29 C.F.R. 1926, Subpart P, for trench safety systems. The Contractor shall bear all costs associated with compliance with IOSHA regulations.

7.2.6 All equipment, including but not limited to graders, bulldozers, backhoes, air-

hammers, generators and miscellaneous trucks, shall be kept in good repair and meeting or bettering the manufacturer's noise level specifications.

7.3 Services, Materials, and Equipment

7.3.1 Unless otherwise specified in the Contract Documents, the Contractor shall provide and assume full responsibility for all services, materials, equipment, labor, transportation, construction equipment and machinery, tools, appliances, fuel, power, light, heat, telephone, water, sanitary facilities, temporary facilities, and all other facilities and incidentals necessary for the performance, testing, start up, and completion of the Work.

7.3.2 All materials and equipment incorporated into the Work shall be as specified or, if not specified, shall be of good quality and new, except as otherwise provided in the Contract Documents. All special warranties and guarantees required by the Project Specifications shall expressly run to the benefit of the City. If required by the Engineer, the Contractor shall furnish satisfactory evidence (including reports of required tests) as to the source, kind, and quality of materials and equipment.

7.3.3 All materials and equipment shall be stored, applied, installed, connected, erected, protected, used, cleaned, and conditioned in accordance with instructions of the applicable Supplier, except as otherwise may be provided in the Contract Documents.

7.4 "Or Equals" and Substitutes

7.4.1 <u>"Or Equal" Items</u>

If in the Engineer's sole discretion an item of material or equipment proposed by the Contractor is functionally equal to that named and sufficiently similar so that no change in related Work will be required, it may be considered by the Engineer as an "or equal" item. For the purposes of this section, a proposed item of material or equipment will be considered functionally equal to an item so named if:

(a) In the exercise of reasonable judgment the Engineer determines that:

1. it is at least equal in materials of construction, quality, durability, appearance, strength, and design characteristics;
2. it will reliably perform at least equally well the function and achieve the results imposed by the design concept of the completed Project as a functioning whole,
3. it has a proven record of performance and availability of responsive service; and
4. it will not cause normal maintenance of or stocking of material to change

(b) The Contractor certifies that, if approved and incorporated into the Work:

1. there will be no increase in cost or increase in Contract Times, and
2. it will conform substantially to the detailed requirements of the item named in the Contract Documents.

7.4.2 Substitute Construction Methods or Procedures

If a specific procedure of construction is required by the Contract Documents, the Contractor may propose a substitute means, method, technique, sequence, or procedure of construction for consideration by the Engineer. The Contractor shall submit, in writing, sufficient information to allow the Engineer, in the Engineer's sole discretion, to determine that the substitute proposed is equivalent to that called for by the Contract Documents.

7.4.3 Engineer's Evaluation

The Engineer will be allowed a reasonable time within which to evaluate each proposal or submittal made pursuant to Division A Sections 7.4.1 and 7.4.2. The Engineer may require the Contractor to furnish additional data about the proposed substitute item. The Engineer will be the sole judge of acceptability. No "or equal" will be ordered, installed or utilized until the Engineer's review is complete, which will be evidenced by either a Change Order for an approved Shop Drawing for an "or equal." The Engineer will advise the Contractor in writing of any negative determination.

7.4.4 Special Guarantee

The City may require the Contractor to furnish at the Contractor's expense a special performance guarantee or other surety with respect to any substitute.

7.4.5 Contractor's Expense

The Contractor shall provide all data in support of any proposed "or equal" item at the Contractor's expense.

7.5 Concerning Subcontractors, Suppliers, and Others

7.5.1 The Contractor shall not employ any Subcontractor, Supplier, or other individual or entity (including those acceptable to the City as indicated in Division A Section 7.5.2), whether initially or as a replacement, against whom the City may have reasonable objection. The Contractor shall not be required to employ any Subcontractor, Supplier, or other individual or entity to furnish or perform any of the Work against whom the Contractor has reasonable objection.

7.5.2 If the Supplementary Conditions require the identity of certain Subcontractors, Suppliers, or other individuals or entities to be submitted to the City in advance for acceptance by the City by a specified date prior to the Effective Date of the Agreement, and if the Contractor has submitted a list thereof in accordance with the Supplementary Conditions, the City's acceptance (either in writing or by failing to make written objection thereto by the date indicated for acceptance or objection in the Bidding Documents or the Contract Documents) of any such Subcontractor, Supplier, or other individual or entity so identified may be revoked on the basis of reasonable objection after due investigation. The Contractor shall submit an acceptable replacement for the rejected Subcontractor, Supplier, or other individual or entity. No acceptance by the City of any such Subcontractor, Supplier, or other individual or entity, whether initially or as a replacement, shall constitute a waiver of any right of the City or the Engineer to reject defective Work.

7.5.3 The Contractor shall be fully responsible to the City for all acts and omissions of the Subcontractors, Suppliers, and other individuals or entities performing or furnishing any of the Work just as the Contractor is responsible for the Contractor's own acts and omissions.

Nothing in the Contract Documents shall create for the benefit of any such Subcontractor, Supplier, or other individual or entity any contractual relationship between the City and any such Subcontractor, Supplier or other individual or entity, nor shall anything in the Contract Documents create any obligation on the part of the City to pay or to see to the payment of any moneys due any such Subcontractor, Supplier, or other individual or entity except as may otherwise be required by Laws and Regulations.

7.5.4 The Contractor shall be solely responsible for scheduling and coordinating the Work of Subcontractors, Suppliers, and other individuals or entities performing or furnishing any of the Work under a direct or indirect contract with the Contractor.

7.5.5 The Contractor shall require all Subcontractors, Suppliers, and such other individuals or entities performing or furnishing any of the Work to communicate with the Engineer through the Contractor.

7.5.6 The divisions and sections of the Specifications and the identifications of any Drawings shall not control the Contractor in dividing the Work among Subcontractors or Suppliers or delineating the Work to be performed by any specific trade.

7.6 Patent Fees and Royalties

7.6.1 The Contractor shall pay all license fees and royalties and assume all costs incident to the use in the performance of the Work or the incorporation in the

Work of any invention, design, process, product, or device which is the subject of patent rights or copyrights held by others.

7.6.2 To the fullest extent permitted by Laws and Regulations, the Contractor shall indemnify and hold harmless the City and its officials, the officers, employees, agents, consultants and subcontractors of each and any of them from and against all claims, costs, losses, and damages (including but not limited to all fees and charges of engineers, architects, attorneys, and other professionals and all court or arbitration or other dispute resolution costs) arising out of or relating to any infringement of patent rights or copyrights incident to the use in the performance of the Work or resulting from the incorporation in the Work of any invention, design, process, product, or device not specified in the Contract Documents.

7.7 Permits and Licenses

Unless otherwise obtained by the City, the Contractor shall procure all permits and licenses, pay all charges and fees therefor, and give all notices necessary and incidental to the due and lawful performance of the Work.

7.8 Laws and Regulations

7.8.1 The Contractor shall give all notices required by and shall comply with all Laws and Regulations applicable to the performance of the Work. Except where otherwise expressly required by applicable Laws and Regulations, the City shall not be responsible for monitoring the Contractor's compliance with any Laws or Regulations.

7.8.2 If the Contractor performs any Work knowing or having reason to know that it is contrary to Laws or Regulations, the Contractor shall bear all claims, costs, losses, and damages (including but not limited to all fees and charges of engineers, architects, attorneys, and other professionals and all court or arbitration or other dispute resolution costs) arising out of or relating to such Work. However, it shall not be the Contractor's primary responsibility to make certain that the Project Specifications and Drawings are in accordance with Laws and Regulations, but this shall not relieve the Contractor of the Contractor's obligations under Division A Section 4.3.

7.8.3 Changes in Laws or Regulations not known at the time of opening of Bids having an effect on the cost or time of performance of the Work may be the subject of an adjustment in Contract Price and/or Contract Times.

7.9 Taxes

The Contractor shall pay all sales, consumer, use, and other similar taxes required to be paid by the Contractor in accordance with the Laws and Regulations of the place of the Project which are applicable during the performance of the Work. The City is exempt

from Indiana state sales and use taxes on materials and equipment to be incorporated in the Work.

7.10 Use of Site and Other Areas

7.10.1 Limitation on Use of Site

(a) The Contractor shall confine construction equipment, the storage of materials and equipment, and the operations of workers to the Public Right of Way, easements and City owned property made available to the Contractor. The Contractor shall assume full responsibility for any damage to any such land or to the owner or occupant thereof, or of any adjacent land resulting from the performance of the Work.

(b) Should any claim be made by any such the owner or occupant because of the performance of the Work, the Contractor shall promptly settle with such other party by negotiation or otherwise resolve the claim by arbitration or other dispute resolution proceeding or at law.

(c) To the fullest extent permitted by Laws and Regulations, the Contractor shall indemnify and hold harmless the City and its officials, officers, employees, agents, consultants and subcontractors of each and any of them from and against all claims, costs, losses, and damages (including but not limited to all fees and charges of engineers, architects, attorneys, and other professionals and all court or arbitration or other dispute resolution costs) arising out of or relating to any claim or action, legal or equitable, brought by any such the owner or occupant against the City or any other party indemnified hereunder to the extent caused by or based upon the Contractor's performance of the Work.

7.10.2 Removal of Debris during Performance of the Work

During the progress of the Work the Contractor shall keep the Site and other areas free from accumulations of waste materials, rubbish, and other debris. Removal and disposal of such waste materials, rubbish, and other debris shall conform to applicable Laws and Regulations.

7.10.3 Cleaning

Prior to Final Completion of the Work the Contractor shall clean the Site and make it ready for utilization by the City. At the completion of the Work, the Contractor shall remove from the Site all tools, appliances, construction equipment and machinery, and surplus materials and shall restore to original condition all property not designated for alteration by the Contract Documents.

7.10.4 City Monuments or Stakes

The Contractor shall carefully protect from any disturbance or injury all City monuments, stakes and benchmarks. If in the opinion of the Engineer, any stakes or monuments have been carelessly or willfully destroyed or disturbed by the Contractor or its employees, agents, or subcontract, the Contractor shall be charged the cost of replacing and such cost shall be deducted from the payments for the Work.

7.10.5 Sanitary Conveniences; Nuisances

The Contractor shall provide all necessary toilet accommodations for the use of the employees on the Project, and shall not create or maintain any public nuisances, as the term is defined in Laws and Regulations, to exist at the Site or in the vicinity of the Site.

7.10.6 Special Project Signs

The Contractor shall furnish, install, and maintain two special project signs, unless more are required in the Project Specifications. The signs shall be installed at or near the Site at locations determined by the Engineer. The signs shall match the standard detail in Division C.

7.10.7 Public Convenience

During the progress of the Work, the sidewalks and any portions of the street adjoining the Site or in its vicinity shall not be obstructed or littered more than may be absolutely necessary and the adjacent sidewalks shall be kept clean. The convenience of the public and of the residents along the street shall be provided for as far as practicable. Convenient access to driveways, houses and buildings along the street shall be maintained wherever possible. Temporary approaches to and crossings of intersecting streets and sidewalks shall be provided and kept in good condition wherever practicable. When work to a sidewalk needs to occur, the Contractor shall provide a pedestrian detour route.

7.10.8 Closure Notifications and Accommodations

The Contractor shall be responsible for notifying all emergency and essential service providers, such as police, fire, mail, trash & recycling, and school systems of all traffic lane and street closures or restrictions.

The Contractor is responsible for confirming the contact information for these service providers. The Contractor shall make accommodations to maintain access for essential services such as mail, trash & recycling, school transportation, and

emergency services. The Contractor is responsible for confirming trash and recycling pickup dates.

7.11 Record Drawings

The Contractors shall maintain accurate notes during construction of the Work. The Contractor shall supply record drawings, in compliance with all requirements of the Division B Section 11 of these specifications, before Final Completion will be granted.

7.12 Safety and Protection

7.12.1 The Contractor shall be solely responsible for initiating, maintaining and supervising all safety precautions and programs in connection with the Work. The Contractor shall take all necessary precautions for the safety of, and shall provide the necessary protection to prevent damage, injury or loss to:

(a) All persons on the Site or who may be affected by the Work;

(b) All the Work and materials and equipment to be incorporated therein, whether in storage on or off the Site; and

(c) Other property at the Site or adjacent thereto, including trees, shrubs, lawns, walks, pavements, roadways, structures, utilities, and Underground Facilities not designated for removal, relocation, or replacement in the course of construction.

7.12.2 The Contractor shall comply with all applicable Laws and Regulations relating to the safety of persons or property, or to the protection of persons or property from damage, injury, or loss; and shall erect and maintain all necessary safeguards for such safety and protection. The Contractor shall notify the owners of adjacent property and of Underground Facilities and other utility of the City's when prosecution of the Work may affect them, and shall cooperate with them in the protection, removal, relocation, and replacement of their property.

7.12.3 At the request of the Engineer, the Contractor shall hold a monthly safety meeting with, at a minimum, all employees and Subcontractors involved in performing the Work at the Site and the Project Inspector. The Contractor and all its Subcontractors shall be responsible for holding these monthly staff meetings prior to beginning the Work at the Site and every month thereafter until the Work has reached the point of Substantial Completion.

7.12.4 All damage, injury, or loss to any property referred to in this section caused, directly or indirectly, in whole or in part, by the Contractor, any Subcontractor, Supplier, or any other individual or entity directly or indirectly employed by any of them to perform any of the Work, or anyone for whose acts any of them may be liable, shall be remedied by Contractor.

7.12.5 The Contractor's duties and responsibilities for safety and for protection of the Work shall continue until Final Completion of all the Work.

7.12.6 Safety Representative

The Contractor and its Subcontractors shall have one representative at the Site designated as the safety contact for the duration of the Work. This representative shall be responsible for ensuring that all safety precautions are taken and all safety issues are properly addressed.

7.13 Hazard Communication Programs

The Contractor shall be responsible for coordinating any exchange of material safety data sheets or other hazard communication information required to be made available to or exchanged between or among employees at the Site in accordance with Laws or Regulations.

7.14 Emergencies

In emergencies affecting the safety or protection of persons or the Work or property at the Site or adjacent thereto, the Contractor is obligated to act to prevent threatened damage, injury, or loss. The Contractor shall give the Engineer prompt written notice if the Contractor believes that any significant changes in the Work or variations from the Contract Documents have been caused by such emergencies.

7.15 Continuing the Work

The Contractor shall carry on the Work and adhere to the Schedule during all disputes or disagreements with the City. No Work shall be delayed or postponed pending resolution of any disputes or disagreements, except as permitted by Division A Section 15.3 or as the City and the Contractor may otherwise agree in writing.

7.16 Contractor's General Warranty and Guarantee

7.16.1 The Contractor warrants and guarantees to the City that all the Work shall be in accordance with the Contract Documents and will not be defective. The City and its Related Entities shall be entitled to rely on representation of the Contractor's warranty and guarantee.

7.16.2 After Final Completion of the Work the Contractor's warranty and guarantee hereunder excludes defects or damage caused by:

(a) Abuse, modification, or improper maintenance or operation by persons other than the Contractor, Subcontractors, Suppliers, or any other individual or entity for whom Contractor is responsible; or

(b) Normal wear and tear under normal usage.

7.16.3 The Contractor's obligation to perform and complete the Work in accordance with the Contract Documents shall be absolute. None of the following will constitute an acceptance of the Work that is not in accordance with the Contract Documents or a release of the Contractor's obligation to perform the Work in accordance with the Contract Documents:

(a) Observations by the Engineer;

(b) Recommendation by the Engineer or payment by the City of any progress or final payment;

(c) Use or occupancy of the Work or any part thereof by the City;

(d) Any review and approval of a Shop Drawing or Sample submittal or the issuance of a notice of acceptability by the Engineer;

(e) Any inspection, test, or approval by others; or

(f) Any activities performed by the City to correct defective Work.

7.17 Indemnification of the City

7.17.1 To the fullest extent permitted by Laws and Regulations, the Contractor shall defend, indemnify and hold harmless the City and its officials, officers, employees, agents, consultants and subcontractors of each and any of them from and against all claims, demands, losses, damages, costs, expenses, judgments and liabilities, including but not limited to all attorney's fees, costs and expenses, arising out of or in any manner connected with the Contractor's performance of or failure to perform the Work, provided that any such claim, demand, loss, damages, costs, expenses, judgments and liabilities are attributable to bodily injury, sickness, disease or death, or to injury or destruction of tangible personal property, including the loss of use resulting therefrom, that is caused in whole or in part by any act or omission of the City, the Contractor, any Subcontractor, anyone directly or indirectly employed by them or anyone for whose acts any of them may be liable.

7.17.2 The Contractor shall defend, indemnify and hold harmless the City and its officials, officers, employees, agents, consultants and subcontractors of each and any of them from and against all claims, damages, losses, costs, and expenses, including but not limited to all attorney's fees, costs and expenses, arising out of or in any manner connected with use by the Contractor and its officers, agents, employees, and Subcontractors of any equipment, materials, tools, construction equipment, machinery, and/or motor vehicles owned or leased by the Contractor. The indemnification by this section shall apply regardless of whether the City

consents to the use of equipment by the Contractor.

7.17.3 The Contractor shall defend, indemnify and hold harmless the City and its officials, officers, employees, agents, consultants and subcontractors of each and any of them from and against all claims, penalties, fines, citations, damages, losses, liabilities, settlements, costs and expenses, including but not limited to all attorney's fees, costs and expenses, arising out of, relating to, or in any manner connected with the breach or violation of any occupational safety and health administration ("OSHA") laws, rules, or regulations by the Contractor, any of its Subcontractors, anyone directly or indirectly employed by them or anyone for whose acts any of them may be liable.

7.17.4 It is the intent of the parties that the Contractor shall indemnify the City under the indemnification provisions above to the fullest extent permitted by law, including indemnification for the sole negligence of the City. If, however, the indemnity herein for bodily injury or death or injury to property caused by the sole negligence of the City is found to be contrary to law, it is the intent of the Contractor and the City that this agreement for indemnity shall in all other respects remain effective and binding on the parties.

7.17.5 The indemnification obligation under this section shall not be limited in any way by any limitations on the amount or type of damages, compensation or benefits payable by or for the benefit of the Contractor or any indemnities under any Worker's Compensation Act, Occupational Disease Act, Disability Benefits Act, or any other employee benefits act. The Contractor further agrees to waive any liability limitations based upon the Worker's Compensation Act, court interpretations, or otherwise.

7.17.6 The Contractor agrees that a similar waiver of liability limitation will be incorporated in its agreements with Subcontractors or anyone directly or indirectly employed by them. The Contractor agrees that in the event it fails to incorporate such a waiver of liability limitation in its agreements with such Subcontractors and others, then the Contractor will be responsible for any additional liability arising out of such failure. The defense and indemnification obligations set forth in this section shall survive the termination or expiration of this Contract.

7.18 Non-Liability

The City shall not be liable for any injuries to the property of the Contractor or any loss or damage sustained by the Contractor caused by or resulting from any activity and/or incidents that are in any way connected with the performance of the Work or any other matter pursuant to the Contract.

7.19 Injuries to Persons and Property

During the progress of or in connected with the performance of the Work, the Contractor shall be solely responsible for all injuries to persons and for all damages to the property of the City or third-parties, caused by or resulting from the negligence of the Contractor, any of its Subcontractors, anyone directly or indirectly employed by them or anyone for whose acts any of them may be liable.

The Contractor must restore all injured property, including sidewalks, curbing, sod, pipes, conduits, sewer facilities and other public or private property to a condition as good as it was when the Contractor started the Work.

7.20 Training Opportunities Offered by the Contractor (For Contracts Awarded After June 30, 2016

7.20.1 (For contracts AWARDED after June 30, 2016) If the Contractor employs ten (10) or more employees, the Contractor must provide access to training of the tasks to be performed in the normal course of the employee's employment with the Contractor. Training can be offered through any of the following programs:

An apprenticeship;
Ivy Tech;
Vincennes University;
A program established by or for the Contractor;
A program sponsored by the US Department of Labor's Bureau of Apprenticeship and Training
A program that results in the award of an industry recognized portable certificate;
A program approved by the Federal Highway Administration; or
A program approved by the Indiana Department of Transportation.

7.20.2 (For contracts AWARDED after June 30, 2016) If the Contractor or a Tier 2 Subcontractor employs fifty (50) or more journeymen, the Contractor or Tier 2 Subcontractor must participate in an apprenticeship or training program that meets the standards established by or has been approved by any of the following:

The US Department of Labor's Bureau of Apprenticeship and Training;
The Indiana Department of Labor;
The Federal Highway Administration; or
The Indiana Department of Transportation.

7.21 Retention of Records

7.21.1 (For contracts AWARDED after June 30, 2016) The Contractor shall preserve all payroll and related records for three (3) years after the issuance of a certificate of completion of the project work. The Contractor shall make these records

available for inspection by the Indiana Department of Workforce Development for the three (3) year period.

7.21.2 The Contractor shall require his/her/its subcontractors, who perform work under this Contract, to preserve all payroll and related records for three (3) years after the issuance of a certificate of completion of the project work. The Subcontractor shall make these records available for inspection by the Indiana Department of Workforce Development for the three (3) year period.

7.22 E-VERIFY PROGRAM

7.22.1 Contractor affirms under the penalties of perjury that he/she/it does not knowingly employ an unauthorized alien. The Contractor shall enroll in and verify the work eligibility status of all his/her/its newly hired employees through the E-Verify program as defined in IC 22-5-1.7-3. The Contractor shall not knowingly employ or contract with an unauthorized alien. The Contractor shall not retain an employee or contract with a person that the Contractor subsequently learns is an unauthorized alien.

7.22.2 Before an employee begins work, the Contractor must submit the employee's case identification number to the City

7.22.3 The Contractor is not required to participate in the E-Verify program should the E-Verify program cease to exist. Additionally, the Contractor is not required to participate if the Contractor is self-employed and does not employ any employees.

7.22.4 The Contractor shall require his/her/its subcontractors, who perform work under this contract, to certify to the Contractor that the subcontractor does not knowingly employ or contract with an unauthorized alien and that the subcontractor has enrolled and is participating in the E-Verify program. The Contractor agrees to maintain this certification throughout the duration of the term of a contract with a subcontractor.

7.22.5 The City may terminate for default if the Contractor fails to cure a breach of this provision no later than thirty (30) days after being notified by the City.

8. OTHER WORK AT THE SITE

8.1 Related Work at Site

8.1.1 The City may perform other work related to the Project at the Site with the City's employees or via other direct contracts therefore, or have other work performed by the utility owners. The City may perform other work that was not part of the Contract.

8.1.2 The Contractor shall afford each contractor who is a party to a direct contract, each utility owner and the City, proper and safe access to the Site, a reasonable opportunity for the introduction and storage of materials and equipment and the execution of such other work, and shall properly coordinate the Work with theirs. The Contractor shall do all fitting, and patching of the Work that may be required to properly connect or integrate with such other work. The Contractor shall not endanger any work of others or alter their work without the written consent of Engineer.

8.1.3 If the proper execution or results of any part of the Contractor's Work depends upon work performed by others under this section, the Contractor shall inspect such other work and promptly report to the Engineer in writing any delays, defects, or deficiencies in such other work that render it unavailable or unsuitable for the proper execution and results of the Contractor's Work. The Contractor's failure to so report will constitute an acceptance of such other work as fit and proper for integration with the Contractor's Work.

8.2 Legal Relationships

8.2.1 The Contractor shall be liable to the City and any other contractor for the reasonable direct delay and disruption costs incurred by such other contractor as a result of the Contractor's action or inactions.

9. CITY'S RESPONSIBILITIES

9.1 Communications to Contractor

Except as otherwise provided, the City shall issue all communications to the Contractor through the Engineer.

9.2 Replacement of Engineer

In case of termination of the employment of the Engineer, the City shall appoint an engineer to whom the Contractor makes no reasonable objection, whose status under the Contract Documents shall be that of the former Engineer.

9.3 Furnish Data

The City shall furnish the data required of the City under the Contract Documents.

9.4 Pay When Due

The City shall make payments to the Contractor when they are due as provided in Division A Sections 14.1 and 14.6. Payments shall be made in accordance with the City's standard payment process.

9.5 Lands and Easements; Reports and Tests

The City's duties in respect of providing lands and easements and providing engineering surveys to establish reference points are set forth in Division A Sections 5.1 and 5.5

9.7 Change Orders

The City is obligated to execute Change Orders as indicated in Division A Section 11.3.

9.8 Inspections, Tests, and Approvals

The City's responsibility in respect to certain inspections, tests, and approvals is set forth in Division A Section 13.4.

9.9 Limitations on City's Responsibilities

The City shall not supervise, direct, or have control or authority over, nor be responsible for, the Contractor's means, methods, techniques, sequences, or procedures of construction, or the safety precautions and programs incident thereto, or for any failure of the Contractor to comply with Laws and Regulations applicable to the performance of the Work. The City will not be responsible for the Contractor's failure to perform the Work in accordance with the Contract Documents.

9.10 Undisclosed Hazardous Environmental Condition

The City's responsibility in respect to an undisclosed Hazardous Environmental Condition is set forth in Division A Section 5.7.

10. ENGINEER'S STATUS DURING CONSTRUCTION

10.1 City's Representative

The Engineer will be the City's representative during the construction period. The duties and responsibilities and the limitations of authority of the Engineer as the City's representative during construction are set forth in the Contract Documents and will not be changed without written consent of the City.

10.2 Visits to Site

10.2.1 The Engineer will make visits to the Site at intervals appropriate to the various stages of construction as the Engineer deems necessary in order to observe as an experienced and qualified professional the progress that has been made and the quality of the various aspects of the Contractor's executed Work. Based on information obtained during such visits and observations, the Engineer, will determine, in general, if the Work is proceeding in accordance with the Contract Documents. The Engineer will not be required to make exhaustive or continuous inspections on the Site to check the quality or quantity of the Work. The Engineer's efforts will be directed toward providing for the City a greater degree of confidence that the completed Work will conform generally to the Contract Documents.

10.2.2 The Engineer's visits and observations are subject to all the limitations on the Engineer's authority and responsibility set forth in Division A Section 10.7. Particularly, but without limitation, during or as a result of Engineer's visits or observations of the Contractor's Work the Engineer will not supervise, direct, control, or have authority over or be responsible for the Contractor's means, methods, techniques, sequences, or procedures of construction, or the safety precautions and programs incident thereto, or for any failure of the Contractor to comply with Laws and Regulations applicable to the performance of the Work.

10.3 Project Inspector

The Engineer may furnish a Project Inspector to assist the Engineer in providing more extensive observation of the Work. The authority and responsibilities of the Project Inspector will be as provided in Division A Section 10.7.

10.4 Authorized Variations in Work

10.4.1 The Engineer may authorize minor variations in the Work from the requirements of the Contract Documents which do not involve an adjustment in the Contract Price or the Contract Times and are compatible with the design concept of the completed Project.

10.4.2 If the variation in the Work will require an adjustment in the Contract Price or the Contract Time, the Engineer and the Contractor will submit a Change Order. Refer to Division A Section 11.

10.5 Rejecting Defective Work

The Engineer will have authority to reject any part of the Work which the Engineer believes to be defective, or the Engineer believes will not produce a completed Project that conforms to the Contract Documents or that will prejudice the integrity of the design concept of the completed Project. The

10.6 Determinations for Unit Price Work

The Engineer will determine the actual quantities and classifications of Unit Price Work performed by the Contractor. The Engineer will review with the Contractor the Engineer's preliminary determinations on such matters before rendering a written decision thereon (by recommendation of an Application for Payment or otherwise). The Engineer's written decision thereon will be final and binding (except as modified by the Engineer to reflect changed factual conditions or more accurate data) upon the Contractor.

10.7 Limitations on Engineer's Authority and Responsibilities

10.7.1 Neither the Engineer's authority or responsibility under this section or under any other provision of the Contract Documents nor any decision made by the Engineer in good faith either to exercise or not exercise such authority or responsibility or the undertaking, exercise, or performance of any authority or responsibility by the Engineer shall create, impose, or give rise to any duty in contract, tort, or otherwise owed by the Engineer to the Contractor, any Subcontractor, any Supplier, any other individual or entity, or to any surety for or employee or agent of any of them.

10.7.2 The Engineer will not supervise, direct, control, or have authority over or be responsible for the Contractor's means, methods, techniques, sequences, or procedures of construction, or the safety precautions and programs incident thereto, or for any failure of the Contractor to comply with Laws and Regulations applicable to the performance of the Work. The Engineer will not be responsible for the Contractor's failure to perform the Work in accordance with the Contract Documents.

10.7.3 The Engineer will not be responsible for the acts or omissions of the Contractor or of any Subcontractor, any Supplier, or of any other individual or entity performing any of the Work.

10.7.4 The Engineer's review of the final Application for Payment and accompanying documentation and all maintenance and operating instructions, schedules,

guarantees, bonds, certificates of inspection, tests and approvals, and other documentation required to be delivered by Division A Section 14.6.1 will only be to determine generally that their content complies with the requirements of, and in the case of certificates of inspections, tests, and approvals that the results certified indicate compliance with the Contract Documents.

10.7.5 The limitations upon authority and responsibility set forth in this section shall also apply to, the Project Inspector if any, and assistants, if any.

11. CHANGES IN THE WORK

11.1 Authorized Changes in the Work

11.1.1 The Engineer will have the right to make such changes in the plans and specifications of the Work as he may deem necessary or desirable or to provide for unexpected conditions or contingencies that may develop at any time after the signing of the Contract, or during the progress or before the final acceptance of the Work.

11.1.2 It is expressly understood and agreed that such alterations, omissions or additions shall in no way violate or annul the Contract.

11.1.3 Upon receipt of any such document, the Contractor shall promptly proceed with the Work involved which will be performed under the applicable conditions of the Contract Documents (except as otherwise specifically provided).

11.1.4 The Contractor shall accept such changes when made as a part of the original Contract and Project Specifications, subject to all the provisions and conditions thereof. But before any such changes shall become valid and before the Contractor shall begin the particular Work involved in such changes the increased or decreased cost of the work by reason of such changes above or below from what it would have been under the original plans and Project Specifications shall be agreed upon in writing by the City and the Contractor.

11.2 Unauthorized Changes in the Work

The Contractor shall not be entitled to an increase in the Contract Price or an extension of the Contract Times with respect to any work performed that is not required by the Contract Documents as amended, modified, or supplemented as provided in Division A Section 4.4, except in the case of an emergency as provided in Division A Section 7.14.

11.3 Execution of Change Orders

11.3.1 The City or the Contractor can give written notice submitted by the party making the Claim for a change in the Contract Price or Contract Time.

11.3.2 The written notice must include a completed “Change Order” form and documented justification of need.

11.3.3 The City and the Contractor shall execute appropriate Change Orders recommended by Engineer covering:

(a) changes in the Work which are: (i) ordered by the City pursuant to Division A Section 11.1 (ii) required because of acceptance of defective Work under Division A Section 13.9 or Owner’s correction of defective Work under Division A Section 13.10, or (iii) agreed to by the parties;

(b) changes in the Contract Price or Contract Times which are agreed to by the parties, including any undisputed sum or amount of time for Work actually performed.

11.3.4 When terms are agreed upon both the City and Contractor will sign the Change Order.

11.4 Change of Contract Price

11.4.1 The Contract Price may only be changed by a Change Order. Any Claim for an adjustment in the Contract Price shall be based on written notice submitted by the Contractor party making the claim to the Engineer.

11.4.2 The value of any Work covered by a Change Order or of any claim for an adjustment in the Contract Price will be determined as follows:

(a) where the Work involved is covered by unit prices contained in the Contract Documents, by application of such unit prices to the quantities of the items involved (subject to the provisions of Division A Section 12);

(b) where the Work involved is not covered by unit prices contained in the Contract Documents, by a mutually agreed lump sum or unit price); or

(c) where the Work involved is not covered by unit prices contained in the Contract Documents and agreement to a lump sum is not reached on the basis of the Cost of the Work the City may contract with another party to complete the Work.

11.5 Change of Contract Times

11.5.1 The Contract Times may only be changed by a Change Order. Any claim for an adjustment in the Contract Times shall be based on written notice submitted by the Contractor making the claim to the Engineer.

11.5.2 Any adjustment of the Contract Times covered by a Change Order or any claim for an adjustment in the Contract Times will be determined in accordance with the provisions of this section.

11.5.3 Delays

(a) Where Contractor is prevented from completing any part of the Work within the Contract Times due to delay beyond the control of the Contractor, the Contract Times will be extended in an amount equal to the time lost due to such delay if a claim is made therefor as provided in this Division A Section 11.5.2. Delays beyond the control of Contractor shall include, but not be limited to, acts or neglect by the City, acts or neglect of utility owners or other contractors performing other work as contemplated

by Division A Section 8, fires, floods, epidemics, abnormal weather conditions.

(b) If the Contractor is delayed in the performance or progress of the Work by fire, flood, epidemic, abnormal weather conditions, or failures to act of utility owners not under the control of the City, or other causes not the fault of and beyond control of the City and the Contractor, then the Contractor shall be entitled to an equitable adjustment in Contract Times, if such adjustment is essential to Contractor's ability to complete the Work within the Contract Times. Such an adjustment shall be the Contractor's sole and exclusive remedy for the delays described in this section.

(c) Contractor shall not be entitled to an adjustment in Contract Times for delays within the control of the Contractor. Delays attributable to and within the control of a Subcontractor or Supplier shall be deemed to be delays within the control of the Contractor.

(d) The City shall not be liable to the Contractor for any claims, costs, losses, or damages (including but not limited to all fees and charges of Engineers, architects, attorneys, and other professionals and all court or arbitration or other dispute resolution costs) sustained by the Contractor on or in connection with any other project or anticipated project.

11.6 Notification to Surety

If notice of any change affecting the general scope of the Work or the provisions of the Contract Documents (including, but not limited to, Contract Price or Contract Times) is required by the provisions of any bond to be given to a surety, the giving of any such notice will be the Contractor's responsibility. The amount of each applicable bond will be adjusted to reflect the effect of any such change.

12. UNIT PRICE WORK

12.1 Costs Included

12.1.1 The cost of the work is s the sum of all costs necessarily incurred and paid by the Contractor in the proper performance of the Work. When the value of any Work covered by a Change Order or when a claim for an adjustment in Contract Price is determined on the basis of the cost of the Work, the costs to be reimbursed to the Contractor will be only those additional or incremental costs required because of the change in the Work or because of the event giving rise to the claim. Except as otherwise agreed to in writing by the City, such costs shall be in amounts no higher than those prevailing in Elkhart County.

12.1.2 The Contractor agrees and acknowledges that its Contract Price includes all allowances in the Contract Documents and that all the Work will be performed for the contract Price.

12.2 Unit Price Work

12.2.1 Where the Contract Documents provide that all or part of the Work is to be Unit Price Work, initially the Contract Price will be deemed to include for all Unit Price Work an amount equal to the sum of the unit price for each separately identified item of Unit Price Work multiplied by the estimated quantity of each item as indicated in the Agreement.

12.2.2 The estimated quantities of items of Unit Price Work are not guaranteed and are solely for the purpose of comparison of Bids and determining an initial Contract Price. Determinations of the actual quantities and classifications of Unit Price Work performed by the Contractor will be made by the Engineer.

12.2.3 Each unit price will be deemed to include an amount considered by the Contractor to be adequate to cover the Contractor's overhead and profit for each separately identified item.

12.3 Non-Reimbursable Items

The Contractor agrees and acknowledges that all costs for the following activities performed by the Contractor or its Subcontractors were incorporated in the Contractor's Bid: dewatering, bypass pumping, relocating or replacing culvert pipe, sewer cleaning street cleaning, sprinkler repair, and repair to damaged property outside of the Site or caused by the Contractor's or Subcontractor's negligence, as determined by the Engineer.

13. TESTS AND INSPECTIONS; CORRECTION, REMOVAL OR ACCEPTANCE OF DEFECTIVE WORK

13.1 Notice of Defects

Prompt notice of all defective Work of which the City has actual knowledge will be given to the Contractor. All defective Work may be rejected, corrected, or accepted as provided in this section.

13.2 Access to Work

The City and its Engineer, consultants, agents, employees, independent testing laboratories, and governmental agencies with jurisdictional interests will have access to the Site and the Work at all times for their observation, inspecting, and testing. The Contractor shall provide them proper and safe conditions for such access and advise them of the Contractor's Site safety procedures and programs so that they may comply therewith as applicable.

13.3 Quality of Material and Work

The judgment and decision of the Engineer as to whether the material supplied and the Work done under the Contract comply with the requirements of the Project Specifications will be conclusive and final. No material shall be used in the Work until it has been examined and approved by the Engineer, or his authorized agents. All rejected material shall be promptly removed from the Work and replaced with that which is acceptable to the Engineer and all improper or defective Work must be corrected and if necessary, removed and reconstructed so as to comply with the Project Specifications and the instructions of the Engineer. All work done to replace or correct any improper or defective Work shall be done at no additional cost to the City.

In all matters of detail not specifically covered by the Project Specifications, the Work shall be well and skillfully done in accordance with the best trade or art customs, practices, and standards for work of like character and purpose.

13.4 Tests and Inspections

The Contractor shall give the Engineer two business days notice of readiness of the Work for all required inspections, tests, or approvals and shall cooperate with inspection and testing personnel to facilitate required inspections or tests.

13.4.1 <u>Testing and Compaction</u>

The Contractor shall provide and comply with all testing and compaction requirements listed in the Testing Section of these Standard Specifications. Copies of all test results shall be submitted to the Engineer within two business days of the test or receipt of the results by the Contractor.

13.4.2 Inspection

The Engineer may provide to the Contractor, at no extra cost to the Contractor, for the inspection, by inspectors under his/her direction, all materials used and all work done under the Contract. Such inspection may extend to all or any part of the Work and to the preparation or manufacture of materials to be used, whether within the limits of the Work on the street, or at any other place. The Engineer and his/her inspectors shall have free access to all places where any part of the materials to be used is procured, manufactured or prepared. The Contractor shall furnish the Engineer all information relating to the Work and the material which the Engineer may deem pertinent and with such samples of materials as required. The Contractor shall at his/her expense, supply inspectors with such labor and assistance as may be necessary in the handling of materials for proper inspection. Inspectors will have authority to reject defective material and to suspend any work that is being improperly done, subject to the final decision of the Engineer.

13.4.3 If any Work (or the work of others) that is to be inspected, tested, or approved is covered by the Contractor without written concurrence of the Engineer, it must, if requested by the Engineer, be uncovered for observation. The Contractor shall pay for all costs or expenses related to uncovering the Work.

13.5 Stopping the Work

If the Work is defective, or the Contractor fails to supply sufficient skilled workers or suitable materials or equipment, or fails to perform the Work in such a way that the completed Work will conform to the Contract Documents, the City may order the Contractor to stop the Work, or any portion thereof, until the cause for such order has been eliminated; however, this right of the City to stop the Work shall not give rise to any duty on the part of the City to exercise this right for the benefit of the Contractor, any Subcontractor, Supplier or, any other individual or entity. The Contractor shall not be entitled to an extension of the Contract Time due to the City ordering the Contractor to stop the Work pursuant to this Section.

13.6 Correction or Removal of Defective Work

13.6.1 Responsibility for Settling

Any depression which may develop in backfilled areas from settlement within three years after the Work is fully completed and accepted shall be the responsibility of the Contractor. The Contractor shall provide as needed, at the Contractor's own expense, additional backfill material, pavement, sidewalk, curb, driveway repair or replacement, and lawn replacement and shall perform the necessary reconditioning and restoration work to bring such depressed areas to proper grade as approved by the Engineer.

13.6.2 Promptly after receipt of notice, the Contractor shall correct all defective Work, whether or not fabricated, installed, or completed. If the Work has been rejected by the Engineer, it shall be removed from the Project and replaced with Work that is not defective. The Contractor shall pay all claims, costs, losses, and damages (including but not limited to all fees and charges of engineers, architects, attorneys, and other professionals and all court or arbitration or other dispute resolution costs) arising out of or relating to such correction or removal (including but not limited to all costs of repair or replacement of work of others).

13.6.3 When correcting defective Work, the Contractor shall take no action that would void or otherwise impair the City's special warranty and guarantee, if any, on said Work.

13.7 Correction Period

13.7.1 If within three years after the date of Final Completion (or such longer period of time as may be prescribed by Contract Documents) any Work that is found to be defective, or if the repair of any damages to the land or areas made available to the Contractor's use by the City or permitted by Laws and Regulations as contemplated in Division A Section 7.10 is found to be defective, the Contractor shall promptly, without cost to the City and in accordance with the City's written instructions:

(a) Repair such defective land or areas; or

(b) Correct such defective Work; or

(c) If the defective Work has been rejected by the City, remove it from the Project and replace it with Work that is not defective, and

(d) Satisfactorily correct or repair or remove and replace any damage to other Work, to the work of others or other land or areas resulting therefrom.

13.7.2 If the Contractor does not promptly comply with the terms of the City's written instructions, or in an emergency where delay would cause serious risk of loss or damage, the City may have the defective Work corrected or repaired or may have the rejected Work removed and replaced. All claims, costs, losses, and damages (including but not limited to all fees and charges of engineers, architects, attorneys, and other professionals and all court or arbitration or other dispute resolution costs) arising out of or relating to such correction or repair or such removal and replacement (including but not limited to all costs of repair or replacement of work of others) will be paid by the Contractor.

13.8 Acceptance of Defective Work

If, instead of requiring correction or removal and replacement of defective Work, the City prefers to accept it, the City may do so. The Contractor shall pay all claims, costs, losses, and damages (including but not limited to all fees and charges of engineers, architects, attorneys, and other professionals and all court or arbitration or other dispute resolution costs) attributable to the City's evaluation of and determination to accept such defective Work and the diminished value of the Work to the extent not otherwise paid by the Contractor.. If any such acceptance occurs prior to the Engineer's recommendation of final payment, a Change Order will be issued incorporating the necessary revisions in the Contract Documents with respect to the Work, and the City shall be entitled to an appropriate decrease in the Contract Price, reflecting the diminished value of Work so accepted. If the acceptance occurs after final payment, an appropriate amount will be paid by Contractor to the City.

13.9 City May Correct Defective Work

13.9.1 If the Contractor fails within a reasonable time after written notice from the Engineer to correct defective Work or to remove and replace rejected Work as required by the Engineer in accordance with Division A Section 13.7.2, or if the Contractor fails to perform the Work in accordance with the Contract Documents, or if the Contractor fails to comply with any other provision of the Contract Documents, the City may, after seven days written notice to Contractor, correct or remedy any such deficiency.

13.9.2 In exercising the rights and remedies under this Section, the City shall proceed expeditiously. In connection with such corrective or remedial action, the City may exclude the Contractor from all or part of the Site, take possession of all or part of the Work and suspend the Contractor's services related thereto, take possession of the Contractor's tools, appliances, construction equipment and machinery at the Site, and incorporate in the Work all materials and equipment stored at the Site or for which the City has paid the Contractor but which are stored elsewhere. The Contractor shall allow the City and its Engineer representatives, agents, employees, consultants, and other contractors, access to the Site to enable the City to exercise the rights and remedies under this Section.

13.9.3 All claims, costs, losses, and damages (including but not limited to all fees and charges of engineers, architects, attorneys, and other professionals and all court or arbitration or other dispute resolution costs) incurred or sustained by the City in exercising the rights and remedies under this Section will be charged against the Contractor, and a Change Order will be issued incorporating the necessary revisions in the Contract Documents with respect to the Work; and the City shall be entitled to an appropriate decrease in the Contract Price. Such claims, costs, losses and damages will include but not be limited to all costs of repair, or replacement of work of others destroyed or damaged by correction, removal, or replacement of the Contractor's defective Work.

13.9.4 The Contractor shall not be allowed an extension of the Contract Times because of any delay in the performance of the Work attributable to the exercise by the City of the City's rights and remedies under this Section.

13.10 Work Performed by City Employees

13.10.1 If the Engineer determines that the City's employees have been used to perform work that is the Contractor's responsibility, the City may charge the Contractor the cost incurred at a rate of $100.00 per hour or the City's standard rate for labor, materials, and equipment, whichever is greater.

13.10.2 The Engineer reserves the right to implement this option after the problem is called to the attention of the Contractor's representative on the Project and the Engineer determines that the problem has not been remedied to the Engineer's satisfaction. At that time the Engineer may deduct the charges from the Contractor's payments or retainage.

Examples of Contractor's responsibilities most frequently neglected to a degree that the Engineer feels compelled to intervene, include, but are not limited to: Record Drawings, Traffic Control, Erosion Control, Subcontractor/Supplier Coordination, Vegetative Establishment, Clean-up and Restoration, etc.

14. PAYMENTS TO CONTRACTOR AND COMPLETION

14.1 Progress Payments

14.1.1 Payment of Periodical Estimates and Final Payment

Payment shall be in accordance with these Standard Specifications, or in accordance with the Project Specifications. No more than once per month, and at the completion of the Work under the Contract, the Contractor shall prepare and submit to the Engineer a detailed estimate in a form approved by the Engineer of the Work performed during the period, such estimate to be used after approval by the Engineer as a basis for periodical and final payment by the City to the Contractor for work performed under the Contract.

The City will make partial payment to the Contractor on the basis of duly certified and approved estimates for the Work performed by the Contractor during the preceding calendar month or period covered by the estimate.

14.1.2 Review of Estimate

(a) The Engineer will, within 10 days after receipt of the Contractor's detailed estimate, review the estimate and if acceptable, create an Application for Payment and recommend payment to the City; otherwise the Engineer will return the estimate to the Contractor indicating in writing the Engineer's reasons for refusing to recommend payment. In the latter case, the Contractor may make the necessary corrections and resubmit the estimate. If deemed acceptable, the Contractor shall sign the Application before the Engineer; and the application shall then be sent to the City for approval.

(b) The Engineer's recommendation of any payment requested in an Application for Payment will constitute a representation by the Engineer to the City, based on the Engineer's observations on the Site of the executed Work as an experienced and qualified design professional and on the Engineer's review of the Application for Payment and the accompanying data and schedules, that to the best of the Engineer's knowledge, information and belief:

1. the Work has progressed to the point indicated;
2. the quality of the Work is generally in accordance with the Contract Documents and
3. the conditions precedent to the Contractor's being entitled to such payment appear to have been fulfilled in so far as it is the Engineer's responsibility to observe the Work.

(c) By recommending any such payment the Engineer will not thereby be deemed to have represented that:

1. inspections made to check the quality or the quantity of the Work as it has been performed have been exhaustive, extended to every aspect of the Work in progress, or involved detailed inspections of the Work; or
2. that there may not be other matters or issues between the parties that might entitle the Contractor to be paid additionally by the City or entitle the City to withhold payment to the Contractor.

(d) Neither the Engineer's review of the Contractor's Work for the purposes of recommending payments, nor the Engineer's recommendation of any payment, including final payment, will impose responsibility on the Engineer:

1. to supervise, direct, or control the Work, or
2. for the means, methods, techniques, sequences, or procedures of construction, or the safety precautions and programs incident thereto, or
3. for the Contractor's failure to comply with Laws and Regulations applicable to the Contractor's performance of the Work, or
4. to make any examination to ascertain how or for what purposes the Contractor has used the moneys paid on account of the Contract Price, or

(e) The Engineer may refuse to recommend payment of the whole or any part of the Contractor's detailed estimate if, in the Engineer's opinion, it would be incorrect to make the representations to the City stated in Division A Section 14.1.2(b). The Engineer may also refuse to recommend any such payment because of subsequently discovered evidence or the results of subsequent inspections or tests. The City may revise or revoke any payment recommendation previously made, to such extent as may be necessary in the Engineer's opinion to protect the City from loss because:

1. the Work is defective, or completed Work has been damaged, requiring correction or replacement;
2. the Contract Price has been reduced by Change Orders;
3. the City has been required to correct defective Work or complete Work; or
4. the Engineer has actual knowledge of the occurrence of any of the events enumerated in Division A Section 15.1.1.

14.1.3 Payment for Pipe Materials and Appurtenances Stored on Site

The Contractor may request payment for materials stored at the Site if:

(a) the material is stored on or within 10 miles of the Site;

(b) the material will be stored at the Site for more than 60 days; and

(c) the Contractor provides invoices verifying the purchase of the materials.

14.1.4 Retainage

(a) The City will retain five percent of the amount of each such periodical estimate until Final Completion and acceptance by the City of all work included in the Contract.

(b) Final payment of retainage by the City on the monthly periodical estimates and on the final estimate will be paid to the Contractor not later than 60 days after final completion and final acceptance by the City of the Work on the Contract.

14.1.5 The City may withhold, in addition to retained percentage, from payment to the Contractor, such an amount or amounts as may be necessary to cover:

(a) Payments that may be earned or due for just claims for labor or materials furnished in and about the Work;

(b) Defective work not remedied;

(c) Failure of the Contractor to make proper payments to his/her Subcontractors;

(d) Reasonable doubt that the Contract can be completed for the balance then unpaid;

(e) Damage caused by the Contractor; and

(f) Excess cost of field engineering and inspection

The City will disburse and shall have the right to act as agent for the Contractor in disbursing such funds as have been withheld pursuant to this Section to the Contractor or Subcontractor who are entitled to payment. The City will render to the Contractor a proper accounting of all such funds disbursed in behalf of the Contractor.

14.1.6 Reduction in Payment

(a) The City may refuse to make payment of the full amount because:

1. claims have been made against the City on account of the Contractor's performance or furnishing of the Work;
2. Liens have been filed in connection with the Work, except where the Contractor has delivered a specific bond satisfactory to the City to secure the satisfaction and discharge of such Liens;
3. there are other items entitling the City a reduction in the amount recommended; or
4. the City has actual knowledge of the occurrence of any of the events enumerated in Division A Sections 14.1.2(e)(1) through 141.2(e)(3) or Division A Section 15.1.

(b) If the City refuses to make payment of the full amount, the City will give the Contractor immediate written notice stating the reasons for such action and promptly pay the Contractor any amount remaining after deduction of the amount so withheld. The City shall promptly pay the Contractor the amount so withheld or any adjustment thereto agreed to by the City and the Contractor, when the Contractor corrects to the City's satisfaction the reasons for such action.

14.2 Contractor's Warranty of Title

The Contractor warrants and guarantees that title to all Work, materials, and equipment covered by any Application for Payment, whether incorporated in the Project or not, will pass to the City, no later than the time of payment, free and clear of all Liens.

14.3 Punch List

14.3.1 When the Contractor considers the entire Work ready for its intended use the Contractor shall notify the Engineer in writing that the entire Work is substantially complete (except for items specifically listed by the Contractor as incomplete) and request that the Engineer shall conduct a walk-through inspection and generate a punch list.

14.3.2 Promptly after the Contractor's notification the Engineer shall make a walk-through inspection of the Work to determine the status of completion. If the Engineer does not consider the Work complete, the Engineer will notify the Contractor in writing and provide a punch list of remaining or defective work.

14.4 Partial Utilization

Prior to completion of all the Work, the City may use or occupy any part of the Work which the City and the Contractor agree constitutes a separately functioning and usable

part of the Work that can be used by the City for its intended purpose without significant interference with the Contractor's performance of the remainder of the Work.

14.5 Final Inspection

Upon written notice from the Contractor that the entire Work is complete and all punch list items have been addressed, the Engineer will promptly make a final inspection with the Contractor and will notify the Contractor in writing of all particulars in which this inspection reveals that the Work is incomplete or defective. The Contractor shall immediately take such measures as are necessary to complete such Work or remedy such deficiencies.

14.6 Final Payment

14.6.1 Application for Payment

(a) After the Contractor has, in the opinion of the Engineer, satisfactorily completed all corrections identified during the final inspection and has delivered, in accordance with the Contract Documents, all maintenance and operating instructions, schedules, guarantees, bonds, certificates or other evidence of insurance certificates of inspection, record drawings, and other documents, the Contractor may make application for final payment following the procedure for progress payments.

(b) The final Application for Payment shall be accompanied (except as previously delivered) by:

1. all documentation called for in the Contract Documents, including but not limited to the evidence of insurance required by Division A Section 6.2.2(c);
2. consent of the surety, if any, to final payment;
3. a list of all claims against the City that the Contractor believes are unsettled;
4. complete and legally effective releases or waivers (satisfactory to the City) of all Lien rights arising out of or Liens filed in connection with the Work; and
5. a Maintenance Bond.
6. a completed Record Drawings
7. a completed Punch List

(c) In lieu of the releases or waivers of Liens and as approved by the City, the Contractor may furnish receipts or releases in full and an affidavit of the Contractor that: (i) the releases and receipts include all labor, services, material, and equipment for which a Lien could be filed; and (ii) all payrolls, material and equipment bills, and other indebtedness connected with the Work for which the City or the City's property might in any way

be responsible have been paid or otherwise satisfied. If any Subcontractor or Supplier fails to furnish such a release or receipt in full, the Contractor may furnish a bond or other collateral satisfactory to the City to indemnify the City against any Lien.

14.6.2 Engineer's Review of Application and Acceptance

If, on the basis of the Engineer's observation of the Work during construction and final inspection, and the Engineer's review of the final Application for Payment and accompanying documentation as required by the Contract Documents, the Engineer is satisfied that the Work has been completed and the Contractor's other obligations under the Contract Documents have been fulfilled, the Engineer will recommend payment and present the final Application for Payment to the City for payment.

14.6.3 Final Payment

The amount recommended by the Engineer for final payment shall be less any sum the City is entitled to deduct, including but not limited to, liquidated damages.

14.7 Waiver of Claims

The making and acceptance of final payment will constitute:

(a) A waiver of all claims by the City against the Contractor, except claims arising from unsettled Liens, from defective Work appearing after final inspection pursuant to Division A Section 14.5, from failure to comply with the Contract Documents or the terms of any special guarantees specified therein, or from the Contractor's continuing obligations under the Contract Documents; and

(b) A waiver of all claims by the Contractor against the City other than those previously made in accordance with the requirements herein and expressly acknowledged by the City in writing as still unsettled.

15. SUSPENSION OF WORK AND TERMINATION

15.1 Termination for Cause

15.1.1 The occurrence of any one or more of the following events will justify termination for cause:

(a) The Contractor's persistent failure to perform the Work in accordance with the Contract Documents (including, but not limited to, failure to supply sufficient skilled workers or suitable materials or equipment);

(b) Failure to adhere to the Schedule as may be adjusted in Change Orders if required in the Supplemental Conditions;

(c) The Contractor's disregard of Laws or Regulations of any public body having jurisdiction;

(d) The Contractor's disregard of the authority of the Engineer; or

(e) The Contractor's violation in any substantial way of any provisions of the Contract Documents.

15.1.2 If one or more of the events identified in this section occur, the City may, after giving the Contractor seven days written notice of its intent to terminate the services of the Contractor:

(a) Exclude the Contractor from the Site, and take possession of the Work;

(b) Incorporate in the Work all materials and equipment stored at the Site or for which the City has paid the Contractor but which are stored elsewhere, and

(c) Complete the Work as the City may deem expedient.

15.1.3 If the City proceeds as provided in this section, the Contractor shall not be entitled to receive any further payment and the City may utilize a portion or the entire Performance bond, Payment bond and retainage to have the Work completed.

15.1.4 Notwithstanding Division A Sections 15.1.2 and 15.1.3, the Contractor's services will not be terminated if the Contractor begins within seven days of receipt of notice of intent to terminate to correct its failure and completes the correction within no more than 15 days of receipt of said notice.

15.1.5 Where the Contractor's services have been so terminated by the City, the termination will not affect any rights or remedies of the City against the Contractor then existing or which may thereafter accrue. Any retention or

payment of moneys due the Contractor by the City will not release the Contractor from liability.

15.2 Termination For Convenience

15.2.1 Upon seven days written notice to the Contractor, the City may, without cause and without prejudice to any other right or remedy of the City, terminate the Contract. In such case, the Contractor shall be paid for:

(a) Completed and acceptable Work executed in accordance with the Contract Documents prior to the effective date of termination; and

(b) Expenses sustained prior to the effective date of termination in performing services and furnishing labor, materials, or equipment as required by the Contract Documents in connection with uncompleted Work,.

15.2.2 The Contractor shall not be paid on account of loss of anticipated profits or revenue or other economic loss arising out of or resulting from such termination.

15.3 Contractor May Stop Work or Terminate

If, through no act or fault of the Contractor, the Work is suspended for more than 90 consecutive days by the City or under an order of court or other public authority, the Contractor may, upon seven days written notice to the City and the Engineer, and provided the City does not remedy such suspension or failure within that time, terminate the Contract and recover from the City payment on the same terms as provided in Division A Section 15.2.

15.4 Violation Reporting – Failure to Remedy

15.4.1 If the City suspects a misclassification of one or more workers by the Contractor, the Contractor agrees that the City can request the Indiana Department of Workforce Development to investigate the suspected worker misclassification and that the Indiana Department of Workforce Development can refer the matter to another appropriate agency.

15.4.2 If the City suspects the Contractor has violated a provision of the chapter relating to E-Verify, Fair Labor Standards Act, or minimum wage laws, the Contractor agrees that the City shall refer the matter to the Indiana Department of Labor.

15.4.3 If the City suspects the Contractor has violated a provision of the chapter relating to worker's compensation or occupational diseases, the Contractor agrees that the City shall refer the matter to the Workers' Compensation Board of Indiana.

15.4.4 If the City suspects the Contractor has violated a provision of the chapter relating to unemployment insurance, the Contractor agrees that the City shall refer the matter to the Indiana Department of Insurance.

15.4.5 If the City suspects the Contractor has violated a provision of the chapter other than those listed above, the City shall require the Contractor to remedy the violation not later than 30 days after notification. Notification shall be in writing, signed by the Mayor and sent by certified mail with a return receipt requested. The Contractor may continue to work on the project during the 30 day period.

15.4.6 If the Contractor fails to remedy the violation within 30 days, the City shall find the Contractor not responsible for purposes of the bidding statutes for a period not to exceed 48 months, which period shall begin on the date of completion of the Project.

16. MISCELLANEOUS

16.1 Giving Notice

Whenever any provision of the Contract Documents requires the giving of written notice, it will be deemed to have been validly given if:

16.1.1 delivered in person to the individual or to a member of the firm or to an officer of the corporation for whom it is intended;
16.1.2 delivered at or sent by registered or certified mail, postage prepaid, to the last business address known to the giver of the notice; or
16.1.3 delivered to the primary contact listed in the Contract Documents by email with delivery receipt verification.

16.2 Computation of Times

When any period of time is referred to in the Contract Documents by days, it will be computed to exclude the first and include the last day of such period.

16.3 Cumulative Remedies

The duties and obligations imposed by these General Conditions and the rights and remedies available hereunder to the parties hereto are in addition to, and are not to be construed in any way as a limitation of, any rights and remedies available to any or all of them which are otherwise imposed or available by Laws or Regulations, by special warranty or guarantee, or by other provisions of the Contract Documents. The provisions of this Paragraph will be as effective as if repeated specifically in the Contract Documents in connection with each particular duty, obligation, right, and remedy to which they apply.

16.4 Survival of Obligations

All representations, indemnifications, warranties, and guarantees made in, required by, or given in accordance with the Contract Documents, as well as all continuing obligations indicated in the Contract Documents, will survive final payment, completion, and acceptance of the Work or termination or completion of the Contract or termination of the services of Contractor.

16.5 Controlling Law and Venue

The provisions of this Contract shall be construed according to the laws of the State of Indiana. Any action arising under this Contract shall be brought in the Federal District Court for the Northern District of Indiana, or the Circuit or Superior Court of Elkhart County, Indiana.

16.6 Headings

Section headings are inserted for convenience only and do not constitute parts of these General Conditions.

17. FEDERAL AND STATE REQUIREMENTS

17.1 Applicable Federal and State Laws.

The Contractor shall comply with all applicable Federal and State laws, including, but not limited to the Federal Fair Labor Standards Act and state labor statutes (Workers compensation (IC 22-2-2-1 through IC 22-2-2-8); Unemployment (IC 22-4-1 through IC 22-4-39.5); Drug testing (IC 4-13-18-1 through IC 4-13-18-7); and Access to training (IC 5-16-13-12)).

17.2 Conflict of Interest

17.2.1 The Contractor may not knowingly contract with a supplier or manufacturer if the individual or entity who prepared the plans and specifications has a corporate or financial affiliation with the supplier or manufacturer.

17.2.2 The City's officers, employees, or agents shall not engage in the award or administration of a Contract if a conflict of interest, real or apparent, would be involved. Such a conflict would arise when: (i) the employee, officer or agent; (ii) any member of their immediate family; (iii) their partner or (iv) an organization that employs, or is about to employ, any of the above, has a financial interest in the Contractor. The City's officers, employees, or agents involved in the award or administration of a Contract shall neither solicit nor accept gratuities, favors or anything of monetary value from the Contractor or subcontractors.

17.3 Gratuities

17.3.1 If the City finds after a notice and hearing that the Contractor, or any of the Contractor's agents or representatives, offered or gave gratuities (in the form of entertainment, gifts, or otherwise) to any official, employee, or agent of the City or Agency in an attempt to secure this Contract or favorable treatment in awarding, amending, or making any determinations related to the performance of this Contract, the City may, by written notice to the Contractor, terminate this Contract. The City may also pursue other rights and remedies that the law or this Contract provides.

17.3.2 In the event this Contract is terminated as provided in this Division A Section 17.3.1, the City may pursue the same remedies against Contractor as it could pursue in the event of a breach of this Contract by the Contractor. As a penalty, in addition to any other damages to which it may be entitled by law, the City may pursue exemplary damages in an amount (as determined by the City) which shall not be less than three nor more than ten times the costs the Contractor incurs in providing any such gratuities to any such officer or employee.

17.4 Audit and Access to Records

For all negotiated contracts and negotiated modifications (except those of $10,000 or less), the City, or any of their duly authorized representatives, shall have access to any books, documents, papers, and records of the Contractor, which are pertinent to the Contract, for the purpose of making audits, examinations, excerpts and transcriptions. The Contractor shall maintain all required records for three years or as required by State or Federal law after final payment is made and all other pending matters are closed.

17.5 Small, Minority, and Women's Businesses

17.5.1 The Contractor shall take affirmative steps where feasible to ensure that qualified small businesses, minority-owned businesses and businesses owned by women are used when possible as sources of supplies, equipment, construction, and services. The Contractor shall take affirmative steps to use the services of the Small Business Administration, the Women Business Enterprise (WBE), and the Offices of Minority Business Enterprise of the U.S. Department of Commerce.

17.5.2 Affirmative steps shall consist of:

(a) Including qualified small, minority, and women's businesses on solicitation lists;

(b) Ensuring that small, minority, and women's businesses are solicited whenever they are potential sources;

(c) Dividing total requirements when economically feasible, into small tasks or quantities to permit maximum participation of small, minority, and women's businesses;

(d) Establishing delivery schedules, where the requirements of the work permit, which will encourage participation by small, minority and women's businesses;

(e) Using the services and assistance of the Small Business Administration and the Minority Business Development Agency of the U.S. Department of Commerce;

(f) Requiring each party to a subcontract to take the affirmative steps of this section; and

(g) The Contractor is encouraged to procure goods and services from labor surplus area firms.

17.6 ADA Requirements

All work in the City's Public Right-Of-Way and on City-owned property shall comply with the Americans with Disabilities Act specifications as outlined in the July 25, 2011 PROPOSED ACCESSIBILITY GUIDELINES FOR PEDESTRIAN FACILITIES IN THE PUBLIC RIGHT-OF-WAY (PROWAG) dated July 25, 2011 and STANDARDS FOR ACCESSIBLE DESIGN 2010 (ADAAG) as or the latest updated version of such guidelines.

Any work that does not meet the PROWAG and ADAAG standards shall be deemed defective work and shall be subject to Division A Section 13.7.2

17.7 Buy American

The Contractor agrees that preference will be given to domestic construction material and domestically made and assembled equipment by the Contractor, subcontractor, and suppliers in the performance of the Contract. Only U.S.A. made steel and foundry products shall be used in compliance with Indiana Code 5-16-8.

17.8 Environmental Requirements

When constructing a project involving trenching and/or other related earth excavations, the Contractor shall comply with the following environmental constraints:

17.8.1 Wetlands

When disposing of excess, spoil, or other construction materials on public or private property, the Contractor shall not fill in or otherwise convert wetlands.

17.8.2 Floodplains

When disposing of excess, spoil, or other construction materials on public or private property, the Contractor shall not fill in or otherwise convert 100 year floodplain areas delineated on the latest Federal Emergency Management Agency Floodplain Maps, or other appropriate maps, i.e., alluvial soils on NRCS Soil Survey Maps.

17.8.3 Historic Preservation

Any excavation by the Contractor that uncovers an historical or archaeological artifact shall be immediately reported to the City. Construction shall be temporarily halted pending the notification process and further directions issued by the City after consultation with the State Historic Preservation Officer (SHPO).

17.8.4 Endangered Species

The Contractor shall comply with the Endangered Species Act, which provides for the protection of endangered and/or threatened species and critical habitat.

Should any evidence of the presence of endangered and/or threatened species or their critical habitat be brought to the attention of the Contractor, the Contractor will immediately report this evidence to the City. The Work shall be temporarily halted pending the notification process and further directions for the City after consultation with the U.S. Fish and Wildlife Service.

Division B - Construction Specifications

1. Site Preparation
2. Stormwater Pollution Prevention and Erosion Control
3. Removals
4. Water Construction
5. Sewer Construction
6. Pavements
7. Miscellaneous Construction
8. Traffic Control Devices and Lighting
9. Landscape
10. Testing
11. Record Drawings

I hereby certify that these Standard Specifications for Construction were prepared by me, or under my direct supervision and that I am a Duly Registered Professional Engineer under the laws of the State of Indiana.

Date: _____

_____

Michael C. Machlan
Registered Professional Engineer
State of Indiana No. 90053

1. SITE PREPARATION

Applicable Non-Reimbursable Items, Division A, Section 12.3, apply to all of the following Site Preparation pay items.

1.1 Mobilization and Demobilization

1.1.1 Description: For mobilization and demobilization of all personnel, equipment, supplies. The bid price shall include all mobilization and demobilization operations necessary to complete the work as shown on the plans or as specified.

1.1.2 General Requirements: Mobilization shall include moving all personnel, equipment, and supplies necessary to complete the work to the site. This shall include any temporary offices, buildings or other facilities that may be necessary to facilitate construction.

Demobilization will include removal of all personnel, equipment, and supplies once construction is completed. It shall include final site cleanup.

1.1.3 Method of Measurement: Mobilization and Demobilization will be paid for on a lump sum basis. Mobilization will account for 75% of the lump sum price with Demobilization accounting for the remaining 25%. The lump sum price shall not exceed 10% of the overall contract price, or the limit defined in the project specifications, whichever is less.

1.1.4 Basis of Payment: Mobilization and Demobilization shall be paid at the lump sum price, with a partial payment schedule as follows:

Partial Payment Schedule	
Percentage of Original Contract Amount Completed	Percentage of Bid Price for Mobilization/Demobilization Allowed
5	50
10	75
100	100

1.2 Construction Staking

1.2.1 Description: For providing all labor, materials and equipment necessary to provide construction layout/surveying for project construction. The bid price shall include, but will not be limited to, all costs for all construction staking necessary to complete the work as shown on the plans or as specified.

1.2.2 General Requirements: Construction staking shall include, but may not be limited, to the following elements:

- Locate existing benchmarks and run level circuit to check elevations and set new benchmarks (if needed) every 500 feet. Benchmark data shall be provided to the Engineer.
- Locate and grade (with offset stakes) subgrade, curbing, pavement, etc., including cut sheets for each structure. Cut sheets shall be provided to the Engineer.
- Stake all structures and other project related items including, but not limited to, hydrants, break-away flanges, manholes (including inverts and rims), inlets, etc.
- Stake right-of-way as necessary.
- Stake all easement lines.
- Provide pre and post-construction detail drawings of each ADA device to the Engineer and verify that the device meets ADA standards.
- Provide line and grade as needed for all casting or other feature adjustments by the Contractor and/or utilities.
- Preserve and perpetuate existing monuments and property irons, which may be at risk due to construction operations. This work shall be performed under the direct supervision of a surveyor licensed in the State of Indiana.
- Field notes shall be kept in standard field notebooks supplied by the Contractor in a clear, orderly and neat manner consistent with standard Engineering practices and procedures. The field books shall be available for inspection by the Engineer at all times and shall become the property of the City upon completion of the work.
- The supervision of the Contractor's construction staking personnel shall be the responsibility of the Contractor and any error resulting from the operations of such personnel shall be corrected at the expense of the Contractor and at no additional cost, to the City. No extensions to the Contract time shall be granted for errors by construction staking personnel.
- The Contractor shall safeguard all points, stakes, grade marks, monuments and bench marks made or established on the Work, bear the cost of reestablishing them if disturbed, and bear the entire expense of rectifying work improperly installed due to not maintaining or protecting them.
- The Contractor shall bring any inaccuracies to the Engineer's attention. It is not the intention to delay work, but the Engineer may suspend operations for such a reasonable time as the Engineer may require to verify or correct inaccuracies in plan grades. Any such delay shall extend the Contract deadline.

1.2.3 Method of Measurement: Construction staking shall be paid for on a lump sum basis.

1.2.4 Basis of Payment: Construction staking will be paid for at the contract lump sum price, with a partial payment schedule as follows:

Partial Payment Schedule	
Percentage of Original Contract Amount Completed	Percentage of Bid Price for Construction Staking Allowed
5	50
50	75
75	100

1.3 Maintenance of Traffic

1.3.1 Description: For all labor, materials, and equipment necessary to furnish, install, maintain, and remove all temporary traffic control devices for the protection of work and safety of the public. The bid price shall include, but will not be limited to, all costs for all temporary signs, two special City Project Signs, posts, barricades, barrels, barriers, striping, lighted arrow boards, flaggers, and detours necessary to complete the work as shown on the plans, as specified or required.

1.3.2 General Requirements: All traffic control signs, devices and measures shall be in accordance with the Manual of Uniform Traffic Control Devices (MUTCD) and INDOT Standard Specifications and Standard Drawings.

The Contractor shall be completely responsible for the timely maintenance of the detour features on a periodic basis, minimum of once per week, and immediate response to maintenance issues on a 24 hour/day basis. Signs shall be subject to rejection and replacement due to wear and tear. The Contractor shall provide 24 hour/day contact information for detour maintenance to the City offices of Engineering, Police, and Communications Department. Approval of the Contractor's own traffic maintenance and detour plan by the City shall not relieve the Contractor from the responsibility to provide safe, efficient traffic flow and detours as described above, and to make any field adjustments to the plans as directed by the City during the project.

Incidental to the lump sum bid shall be the placement and maintenance of sufficient temporary approaches and access-directing signage as deemed necessary by the Engineer to provide uninhibited access to local businesses. The Contractor shall be responsible for advanced coordination as needed with the City for any issues involving parking restrictions, existing traffic signal timing modifications, etc., so as to not cause delay to the project time schedule. The Contractor shall be responsible for notifying all emergency and essential services, such as police, fire, mail, trash & recycling, and school systems of all lane and street closures or restrictions. The Contractor shall coordinate with the Elkhart Community Schools for rerouting/modifying school bus routes and drop-off/pick-up sites within the Project limits.

The Contractor shall maintain an ADA detour route approved in advance of construction. The Contractor shall also maintain the pedestrian detour rout during the project. Alternate pedestrian access routes must be provided when a pedestrian circulation path is temporarily closed by construction, alterations, maintenance operations, or other

conditions. The alternate pedestrian access route must comply with the referenced MUTCD standards.

The Contractor shall submit a detailed traffic control plan to the Engineer for review and approval prior to receiving the Notice to Proceed. The traffic control plan shall include all detour route signage, both vehicular and pedestrian, and approximate location of traffic control devices (e.g. cones, barricades, etc). Any additional proposed road closures and lane restrictions, other than those that may be identified in the project specifications, shall be submitted to the Engineer for approval at least seven days in advance of the Work.

"Road Construction Ahead" signs shall be installed prior to the beginning of work, and shall be removed only after all construction activity is complete. All Type III barricades shall have reflective material on both sides of the planks, and shall be located as directed within the project. Construction signage shall be placed for optimum visibility to motorists (i.e. avoiding obstructions). When "sand bagged" temporary sign bases are acceptable, the Contractor shall provide a sufficient number of sand bags to maintain the signs and barricades in the proper upright position.

When the operation of existing traffic signals must be interrupted, or the existing traffic signals are to be removed before new signals are placed in operation, the Contractor shall conduct the Work such that interruption will be limited to a minimum amount of time and is to erect and maintain temporary "Stop" signs at the intersection and cover the signals as required by the Engineer. It is the Contractor's responsibility to contact the Police Department, if necessary, to direct traffic.

The Contractor shall provide notice of all street closures to all contacts listed on the street closure form at least 48 hours in advance.

Any deficient temporary traffic control devices, as identified by the Engineer, shall be submitted to the Contractor and corrected within 24 hours.

The Contractor shall provide suitable access, as determined by the Engineer, to all homes for garbage pickup, police, fire, postal service, and ambulance access.

Temporary traffic control devices shall be removed upon final completion of all construction operations.

The Contractor shall provide and install two (2) special City Project Signs. The signs shall be manufactured to the Project Sign Detail in Division C – Standard Drawings. The Contractor shall install the signs at locations to be determined by the Engineer at the start of the project. The Contractor shall maintain the each sign until construction is completed. The Contractor shall remove the signs at the end of the project.

1.3.3 Method of Measurement: Maintenance of traffic shall be paid for on a lump sum basis.

1.3.4 Basis of Payment: Maintenance of Traffic shall be paid at the contract lump sum price, with a partial payment schedule as follows:

Partial Payment Schedule	
Percentage of Original Contract Amount Completed	Percentage of Bid Price for Maintenance of Traffic Allowed
5	50
50	75
100	100

2. STORMWATER POLLUTION PREVENTION AND EROSION CONTROL

Applicable Non-Reimbursable Items, Division A, Section 12.3, apply to all of the following Stormwater Pollution Prevention and Erosion Control pay items.

2.1 Post-Construction On-Site Drainage (Site developments that are not in the public right-of-way)

Commercial and industrial sites under development, redevelopment, or otherwise undergoing construction for improvements to the site must retain the first three inches of precipitation that fall on the site once construction is complete.

Roof Drains: No owner or occupant of any building shall cause the pipes conducting water from the eaves of the building to be so constructed as to spread water over the adjoining sidewalk, street or alley pavement (*Elkhart City Code 97.121*). Roof drains also cannot directly discharge into the City's sewer system.

On-Site Retention: A modified version of the rational method is the formula used by the City's Engineering Department to calculate the necessary on-site (drainage) retention requirements. The formula is:

$$\mathbf{V = CIA}$$

where **V** = volume to be retained (ft^3)
C = runoff coefficient (as used in the rational method)
I = rainfall depth (ft)
A = area (ft^2)

The City allows a few basic assumptions to simplify this calculation. First, **I** (rainfall depth) is for a 3-inch rainfall over a 24-hour period. Three inches is converted to 0.25 feet in order to allow the final answer to be recorded in cubic feet. The second assumption, **C** (runoff coefficient) is 0.9 for impervious surfaces and 0.3 for pervious surfaces. Calculation of the retention requirements for a site can then be accomplished using the square footage for the impervious and pervious surfaces in combination with the assumptions provided. This calculation shall be based solely upon the post-construction site conditions and there will be no deductions or allowances for pre-existing site conditions. If ($\mathbf{C_1IA_1}$) is designated for the impervious and ($\mathbf{C_2IA_2}$) for the pervious calculation, then $\mathbf{V = C_1IA_1 + C_2IA_2}$ will provide the cubic footage of retention that will be required for the site.

Retention Facilities: Typical retention facilities include dry wells, swales, infiltrators or retention ponds. Alternative retention facilities will be considered, but greater detail must be submitted relating to the design and benefits of the alternative. Paved area surface retention shall not exceed 20% of total retention required.

Base of swales or retention ponds shall be constructed with a soil mix of 50% sand / 50% topsoil and with minimal compaction to facilitate percolation

Periodic Maintenance: Retention facilities shall be inspected annually at a minimum to assure proper maintenance. Periodic Maintenance generally falls into four areas: 1) mowing, 2) removal of sediment, 3) slope stabilization, and 4) structure repair.

Mowing is a standard maintenance requirement for basins and swales. The grass should be maintained at a height of at least three inches within these areas.

As sediment accumulates in retention facilities, periodic maintenance shall be required. Sediment accumulation leads to loss of percolation and must be removed to restore proper function. Sediment accumulates at varying rates depending on the specific site condition. This maintenance activity shall be completed as needed based on the rate of sediment accumulation.

Slope erosion often occurs when vegetation on the steep banks of swales or retention ponds is missing. Re-grading and re-establishing the vegetation may be required to stabilize and maintain the facilities.

Concrete, plastic and metal pipes and structures need to be inspected and repaired if deterioration occurs.

2.2 Stormwater Management

Rule 5 (327 IAC 15-5) is a state law intended to prevent stormwater pollution at construction sites. Its main goal is to protect Indiana's rivers, lakes, and wetlands from sediment and other pollutants that could run off of construction sites during rain events. The requirements of Rule 5 apply to all construction activities that result in the disturbance of one acre or more of total land area.

All projects within the City of Elkhart that disturb one or more acres of land will be required to maintain compliance with Rule 5 and all of its requirements throughout the length of the project. This shall include compliance with the Stormwater Pollution Prevention Plan (SWPPP) that shall be required for Rule 5 projects. Furthermore, City of Elkhart projects that are not subject to Rule 5 shall still be required to install and maintain basic Best Management Practices (BMPs) as outlined in the project documents to ensure protection of local rivers, lakes and streams from construction site contaminants. Failure to maintain these BMPs in a timely fashion as required by the site’s SWPPP or as required by the City shall result in suspension of the project, or City employees shall correct the deficiencies and the primary contractor will be billed according to requirements outlined in the Division A Section 13.10.

For all projects that are subject to Rule 5, several documents are required to be publicly visible at the project site. These documents include a copy of the Notice of Intent (NOI)

and a copy of the SWPPP or a note as to its location. The back of the project sign is the most common location for these two documents to be posted.

In an effort to minimize stormwater pollutants on project sites, Elkhart has compiled this limited list of BMPs found in this Section for use on City of Elkhart projects. Alternative BMPs may be considered, but all alternatives shall be approved by the City Engineer. Required sediment control BMPs shall be installed before any ground disturbing activities may begin.

Disturbed areas and stockpiles at a site that will remain undisturbed for more than 15 days shall have a temporary stabilization measure installed upon them to ensure erosion control. In addition, the construction site and all installed BMPs must be inspected within 24 hours of every rain event over 0.5 inches and at least once every seven calendar days until the Notice of Termination (NOT) for the SWPPP is approved (Rule 5 projects) or the project is accepted by the City Engineer (non-Rule 5 projects). These site inspections will note any erosion or sediment control issues, the condition of all BMPs on the project site and any corrective/maintenance actions that were taken to minimize erosion and keep sediments from leaving the site.

Refer to the *Indiana Storm Water Quality Manual* before beginning any construction project for any additional details on the design, installation and maintenance of many BMPs commonly used to control or minimize stormwater pollutants on construction sites.

2.3 Pollution Prevention and Erosion Control (Best Management Practices)

2.3.1 Description: For furnishing and installing complete and in place, all labor, materials, and equipment necessary for the placement of all pollution prevention and erosion control devices. The bid price shall include, but not be limited to, all costs for temporary seed, erosion control blankets, mulch, perimeter protection, inlet protection, temporary construction entrance pads, concrete washouts, street cleaning/sweeping, temporary toilet maintenance, construction trash disposal, tree protection/fencing, and all other required BMPs necessary for minimizing erosion and sediment transport inside and outside of the project limits while completing the work as shown on the plans or as specified.

2.3.2 General Requirements: The Contractor shall hold the City harmless for any non-compliance with the erosion and sediment control plan details, specifications, City Ordinances, and/or SWPPP permit.

An on-site Contractor representative, acceptable to the City, shall be familiar with the *Indiana Storm Water Quality Manual* and the project pollution prevention and erosion control requirements, and have the authority to implement these measures as needed for the control of erosion, including unforeseen erosion situations. The Contractor's responsibility for control of erosion shall be incidental to the Contract for all necessary measures beyond those specifically listed in the Contract Documents. The Engineer may direct incidental erosion control measures as needed; however, the Contractor shall bear

the ultimate responsibility for recognizing the need for, and implementation of pollution prevention and erosion control measures.

The sequence of general work operations, relating to earth disturbing activities, shall be such as to prevent the potential for erosion. Temporary erosion control measures shall be implemented at the time of clearing of the Public Right-of-Way, as early in the sequence as needed, and shall be maintained throughout the sequence as needed. During the course of work, maintenance of the control measures shall be done as needed to avoid erosion and sedimentation.

During any and all dewatering operations, the Contractor shall be responsible for preventing sedimentation associated with discharge flow at the Contractor's expense, including possible measures such as "dewatering bags" to filter dewatering flow.

The Contractor shall be responsible for the control and containment of liquid or soluble construction materials for the protection of groundwater sources. The Contractor shall be responsible for assuring that any fuel or other construction liquid storage on site is done so that potential spills would be properly contained to prevent them from entering the soil. Any accidental spillage shall be cleaned up and disposed of immediately by proper means, regardless of time of day or day of the week. The Contractor shall be responsible for ensuring that the washing of vehicles or construction equipment on site is done so that washed-off materials would be properly contained to prevent them from entering the soil.

The Contractor shall provide a 24-hr/day emergency phone number prior to the start of work, for use by the City and emergency officials to contact the Contractor in the event of a spillage within the project limits.

The Contractor shall remove sediment deposits which result from the work at the Contractor's expense, including, but not limited to, sediment within any new or existing storm or sanitary sewers within the project limits and affected sewers downstream of the project limits.

2.3.2.1 Temporary Seed:

Place temporary seed necessary to stabilize construction areas that are inactive for 15 days or more. Temporary stabilization/vegetative growth shall be established to 80% coverage.

Material

The type of temporary seed shall be selected from the list below.

Seed Species	Rate per Acre	Planting Depth	Optimum Dates
Wheat or Rye	150 lbs.	1 to 1½ inches	Sept. 15 – Oct. 30
Spring Oats	100 lbs.	1 inch	March 1 – April 15
Annual Ryegrass	40 lbs.	¼ inch	March 1 – May 1 Aug. 1 – Sept. 1
German Millet	40 lbs.	1 to 2 inches	May 1 – June 1
Sudangrass	35 lbs.	1 to 2 inches	May 1 – July 30
Buckwheat	60 lbs.	1 to 2 inches	April 15 – June 1

Sorghum	35 lbs.	1 to 2 inches	May 1 – July 15

Seed shall be applied uniformly with a mechanical seeder or by broadcasting. Plant or cover seed to the depth shown in the table above.

Maintenance

At a minimum the seeded area shall be watered once every other day for the first three weeks to insure germination and initial plant growth. During periods of ample rainfall, watering may be modified with approval from the Engineer or his/her representative. During periods of drought and excessive heat, the Contractor may need to increase watering to ensure establishment of vegetation. Reseeding small areas or the entire site will be necessary if the initial seeding does not establish a vegetative growth that covers at least 80% of the disturbed soil.

2.3.2.2 Erosion Control Blankets:

Place erosion control blankets for the temporary stabilization of disturbed areas or stockpiles that are inactive for 15 days or more. Temporary stabilization shall be established to 80% coverage.

Material

Site conditions (e.g., slope, channel, flow velocity) and the manufacturer's specifications will determine the type and weight of erosion control blanket that is appropriate.

Application

Erosion control blankets shall be placed on the seeded area so that they are in continuous contact with the soil with each up-slope or up-stream blanket overlapping the down-slope or down-stream blanket by at least eight inches, or follow manufacturer's recommendations. Tuck the uppermost or outermost edge of the blankets that are on the edge into a check slot (slit trench), backfill with soil and tamp down. In certain applications, the manufacturer may require additional check slots at specific locations down slope from the uppermost edge of the upper blankets. The blankets shall be anchored in place by driving staples, pins, or stakes through the blanket and into the underlying soil. The anchoring pattern shall be appropriate for the site conditions and as recommended by the manufacturer, with a minimum of 2 anchors per square yard of blanket installed.

Maintenance and Repair

During each site inspection, check for erosion and displacement of the blanket. If any area shows erosion, pull back that portion of the blanket covering the eroded area, add soil and tamp, reseed the area (if it was seeded), replace and staple the blanket. Replace any damaged blankets.

2.3.2.3 Mulch:

Place mulch for the temporary stabilization of disturbed areas that are inactive for 15 days or more. Temporary stabilization shall be established to 80% coverage.

Material

Straw, hay, wood fiber or cellulose are acceptable forms of mulch.

Application

Apply mulch at the recommended rate shown in the table below. Spread the mulch material uniformly by hand, hayfork, mulch blower, or hydraulic mulch machine. After spreading, no more than 20 percent of the ground should be visible. Anchor straw or hay mulch immediately after application. The mulch can be anchored using one of the methods listed in the second table below.

Material	**Rate per Acre**	**Comments**
Straw or hay	2 tons	Should be dry, free of undesirable seeds. Spread by hand or machine. Must be crimped or anchored (see Table 2).
Wood fiber or cellulose	1 ton	Apply with a hydraulic mulch machine and use with tacking agent.

Anchoring Method[1]	**How to Apply**
Mulch anchoring tool or farm disk (dull, serrated, and blades set straight)	Crimp or punch the straw or hay two to four inches into the soil. Operate machinery on the contour of the slope.
Cleating with dozer tracks	Operate dozer up and down slope to prevent formation of rills by dozer cleats.
Wood hydromulch fibers	Apply according to manufacturer's recommendations.
Synthetic tackifiers, binders, or soil stabilizers	Apply according to manufacturer's recommendations.
Netting	Install netting immediately after applying mulch. Anchor netting with staples. Edges of netting strips should overlap with each up-slope strip overlapping four to six inches over the adjacent down-slope strip. Best suited to slope applications. In most instances, installation details are site specific, so manufacturer's recommendations should be followed but at a minimum, 2 anchors per square yard of netting shall be installed..

[1] All forms of mulch must be anchored to prevent displacement by wind and/or water.

Maintenance and Repair

During each site inspection, check for erosion or displacement of the mulch. If any area shows signs of erosion, reapply mulch to attain 80% coverage of the area.

2.3.2.4 Silt Fence:

Silt fence shall be placed to intercept and reduce the velocity of stormwater leaving construction areas.

Material

Woven or non-woven geotextile fabric meeting specified minimums outlined in the table below. Support posts will be 2 x 2 inch hardwood posts or steel posts with projections for fastening fabric.

Physical Property	**Woven Geotextile Fabric**	**Non-Woven Geotextile Fabric**
Filtering efficiency	85%	85%
Textile strength at 20% elongation		
Standard strength	30 lbs. per linear inch	50 lbs. per linear inch
Extra strength	50 lbs. per linear inch	70 lbs. per linear inch
Slurry flow rate	0.3 gal./min./square feet	4.5 gal./min./square feet
Water flow rate	15 gal./min./square feet	220 gal./min./square feet
UV resistance	70%	85%
Post spacing	5 feet	5 feet

Application

At least the bottom 12 inches of fabric shall be placed in a trench that is a minimum of eight inches deep and four inches wide. The ends of the fencing shall be turned up slope to keep runoff from going around the ends. The filter fabric shall be placed on the up-slope side of the excavated trench and the support posts on the down-slope side of the trench. The support post shall be driven at least 18 inches into the ground and the height of the posts and fabric must extend at least 18 inches above ground level. The trench shall be backfilled with soil material that is compacted in place.

Maintenance and Repair

During each site inspection, check for torn, ripped or decomposing fabric or broken posts and replace or repair these affected areas immediately. Deposited sediment shall also be removed when it causes the fabric to

bulge or when it reaches one-half the height of the fence at its lowest point.

2.3.2.5 Inlet Protection:

Inlet protection devices shall be provided on all curb inlets, catch basins, and open grated manholes.

Material

Mats, socks or other erosion control devices that can be placed on, in or directly adjacent to sewer curb inlets that will minimize the amount of sediment entering the inlet while also minimizing the pooling of water in the roadway. The device should also have an overflow option for times of heavy rain to accommodate the excess flow while slowing the water before it enters the inlet.

Application

The device can be temporarily attached directly to the inlet grate or the curb to insure its ability to remain in place during heavy rain events. If it is a prefabricated device, follow the manufacturer's installation recommendations. The vertical profile of any installed device should also be such that it does not create a road hazard for vehicles.

Maintenance and Repair

During each site inspection, check for damage caused by vehicular traffic and replace or repair as needed. Deposited sediment shall also be removed after each rain event. Place this sediment in an area where it cannot re-enter the paved area or inlet.

2.3.2.6 Temporary Construction Entrance Pad:

Temporary construction entrance pads shall be placed at all active entrances/exits to the construction site to minimize the amount of sediment tracked off an active site.

Material

Geotextile fabric underlayment (see Appendix C, *Indiana Storm Water Quality Manual*), 1 to 2 ½ inch diameter washed aggregate (INDOT CA No. 2) as a base. To improve performance of the pad the contractor may use 1/2 to 1 ½ inch washed aggregate (INDOT CA No. 53) as a top-dressing.

Application

All vegetation and debris must be removed from the area where the entrance pad will be installed. The minimum dimensions of the pad will be 12 feet wide and 50 feet in length. The minimum thickness of the aggregate will be six inches total. The foundation and crown of the finished pad shall be graded to create positive drainage within the site. The

geotextile fabric shall be installed in accordance with Appendix C of the *Indiana Storm Water Quality Manual*.

Maintenance and Repair

Inspect daily. Reshape the pad as needed to maintain positive drainage. Remove and replace aggregate or top-dress with fresh aggregate as needed to minimize sediment from being tracked off-site. Any sediment tracked onto public roads shall be cleaned up using dry methods. Tracked sediments should never be removed from roads using water.

2.3.2.7 Concrete Washout:

Concrete washouts shall be provided on site at all times when concrete is being delivered. All concrete trucks shall utilize the washout to dispose of excess concrete or when using water to clean off equipment or other material that has been exposed to wet concrete.

Material

Contractor preference, site conditions and construction activities will determine the type of concrete washout system that will be utilized. The three acceptable approaches are:

- Contractor's concrete supplier utilizes delivery trucks that are outfitted with mobile concrete washout systems and each truck will properly capture and retain the concrete washout generated during each delivery.
- A prefabricated, leak-proof washout system/container.
- A temporary concrete washout containment system fabricated at the construction site. If this option is chosen, follow the guidelines in Chapter 7 of the *Indiana Storm Water Quality Manual* for the types of material to use and proper installation.

Installation

All concrete washout systems must be installed at least 50 feet away from any creeks, wetlands, ditches, or storm drain inlets.

Maintenance and Repair

Inspect daily. Look for leaks or signs of liner failure and repair as needed. Once a system reaches 50% of its capacity, excess hardened concrete and/or waste water must be properly removed and disposed of before the system may be utilized again.

2.3.2.8 On-Street Tracking:

Soil/sediment deposited on adjacent or nearby roadways due to vehicle traffic from the construction site or deficient/failing sediment control BMPs shall be immediately cleaned up and the source of the problem addressed.

Preventive Actions
Conduct inspections of installed BMPs as often as each measure requires. Complete maintenance activities or repairs on all BMPs that are found to be deficient or failing.

Corrective Actions
Use dry methods to clean up soil and sediment that have been deposited in the roadway. Place the collected material in an area where it cannot re-enter the roadway. Complete maintenance activities or repairs immediately on the BMPs that allowed the soil and/or sediment to leave the construction site.

Duration
Inspect for this issue daily from the first day any soil is disturbed on the site until permanent seeding or stabilization has been installed.

2.3.2.9 Temporary Toilets:
When provided on site, portable or temporary toilets shall be properly located and secured to prevent leaks and stormwater contamination.

Installation
All toilets must be installed at least 50 feet away from any creeks, wetlands, ditches, or storm drain inlets.

Preventive Actions
Secure portable toilets to the ground to minimize the chance of tipping over, or install a secondary containment device around each.

Corrective Actions
If the portable toilets are not secured to the ground, secure them or install a secondary containment device. If a toilet does tip over, any chemicals or wastes that leak out onto the ground as well as the soil that has been contaminated must be cleaned up and disposed of properly.

Maintenance and Repair
During each site inspection check toilets for leaks and insure they are still properly secured to the ground or the secondary containment devices are undamaged and working properly.

Duration
Contractors will determine when portable toilets are needed on a construction site. The costs associated with portable toilets are considered incidental.

2.3.2.10 Trash:

Trash from Contractor and subcontractor employees and construction activity shall be properly contained and prevented from scattering across the site and to adjacent properties.

Preventive Actions

Locate covered trash cans on each construction site to encourage the proper disposal of trash. If trash cans are not provided, describe the trash control practice that will be used at the site and how this information will be provided to the construction crew.

Corrective Actions

On a weekly basis collect and dispose of any trash that has accumulated on the project site.

Duration

Inspect for this issue daily from the first day any work is done on the site until construction crews are no longer present.

2.3.2.11 Tree Protection/Preservation:

Trees within the construction site, which are not designated for removal, shall be protected and preserved.

Material

Fencing and support posts or another type of barrier that is approved by the Engineer.

Installation

Install fencing or barrier around designated trees as far out as the drip line of each individual tree to keep equipment off the rooting area. Clumps of trees may be protected as a group as long as the fencing or barrier is installed as far out as the drip line located along the perimeter.

Maintenance and Repair

During each site inspection, check the fencing or barrier to insure it has not moved and visually inspect the protected trees for any damage that may have been caused by on-site equipment. Properly prune all damaged limbs and avoid leaving stubs. Repair wounds simply by removing damaged bark and wood tissue. The use of tree paint is not permitted.

2.3.3 Method of Measurement: Unless otherwise defined in the project specifications, Pollution Prevention and Erosion Control will be paid for on a lump sum basis that shall encompass all pollution prevention and erosion control methods and devices.

2.3.4 Basis of Payment: Unless otherwise defined in the project specifications, Stormwater Pollution Prevention and Erosion Control shall be paid at the lump sum price, with a partial payment schedule as follows:

Partial Payment Schedule	
Percentage of Contract Amount Earned	Percentage of Bid Price for Pollution Prevention and Erosion Control
5	50
50	75
100	100

3. REMOVALS

Applicable Non-Reimbursable Items, Division A, Section 12.3, apply to all of the following Removals pay items.

3.1 Clearing and Grubbing Right-of-Way

3.1.1 Description: For furnishing all labor, materials and equipment necessary for the clearing and grubbing the Public Right of Way. The bid price shall include all removal and disposal operations necessary to clear vegetation, trees less than 6 inches in diameter, fencing, landscaping, and debris within the limits of the Public Right of Way, easements, and project limits as needed to complete the work shown on the plans or as specified.

3.1.2 General Requirements: Vegetation, including but not limited to, trees, shrubs, and plants as well as any other debris, fencing, or landscaping, shall be removed from the project limits as needed to complete the Work shown on the plans or as specified, and disposed of.

Unless otherwise designated in the project specifications, clearing and grubbing shall include removal and disposal of all trees and tree stumps, regardless of diameter.

Burning of removed material shall not be permitted.

All items that will not impede work, or that are designated to be preserved, shall be protected. Any damage to the natural terrain or to vegetation or objects designated to remain shall be repaired, replaced, or otherwise compensated for, as determined by the Engineer, at the Contractor's expense.

3.1.3 Method of Measurement: Clearing and grubbing shall be paid for on a lump sum basis.

3.1.4 Basis of Payment: Clearing and grubbing shall be paid for at the contract lump sum price.

3.2 Tree and Stump Removal

3.2.1 Description: For furnishing all labor, materials and equipment necessary to remove trees greater than or equal to six inches in diameter and their stumps. The bid price shall include, but will not be limited to, all costs for removal and disposal of designated trees and stumps as shown on the plans or as specified.

3.2.2 General Requirements: Tree removal shall include removal of all trees greater than or equal to six inches in diameter. The diameter of the tree shall be determined at the point four feet above ground level. One stump is considered one tree, regardless of the number of trunks. If multiple trunks result from the same stump, the largest diameter trunk will be measured to determine the diameter. Removal of trees less than six inches in

diameter is considered incidental to the project unless a pay item for clearing and grubbing is provided.

Removed trees shall have their stumps pulled entirely and the remaining void filled with acceptable backfill material, as approved by the Engineer. Removal of stumps and root masses shall be considered part of tree removal.

The Contractor shall dispose of tree trunks, wood logs, root masses, and other portions of removed trees not easily chipped. Ash trees should not be moved between May 1 and July 4, and shall not be transported outside of the federal EAB (Emerald Ash Borer) quarantine area for disposal. Disposed material shall not be burned by the Contractor on site.

3.2.3 Method of Measurement: Tree removal shall be measured by the unit.

3.2.4 Basis of Payment: The accepted quantities of tree removal will be paid for at the contract price per unit.

3.3 Pavement Removal

3.3.1 Description: For furnishing all labor, materials and equipment necessary to remove pavement. The bid price shall include, but will not be limited to, all costs for removal and disposal of pavement, regardless of thickness, shown on the plans or as specified.

3.3.2 General Requirements: The Contractor shall remove and dispose of all pavement designated for removal. The removal of pavement shall include, but not be limited to, all concrete, asphalt, brick pavers, curb, curb and gutter, or other hard surface, and any reinforcement that may be present. The removal of pavement shall include any necessary saw cutting.

Pavement removal shall include the entire cross-section of pavement, regardless of depth, or presence of overlaid material.

Pavement removal shall not include drive approaches, which are incidental to drive approach construction items, sidewalk removal, or areas specifically designated for rotomilling on the plans.

3.3.3 Method of Measurement: Pavement removal will be measured by the square yard from back of curb to back of curb, edge of shoulder to edge of shoulder, or edge of road to edge of road, or as delineated on the plans, whichever is applicable.

3.3.4 Basis of Payment: The accepted quantities of pavement removal will be paid for at the contract price per square yard.

3.4 Rotomilling

3.4.1 Description: For furnishing all labor, materials and equipment necessary to rotomill (mill) pavement. The bid price shall include, but will not be limited to, all costs for removal and disposal of milled pavement shown on the plans or as specified.

3.4.2 General Requirements: The Contractor shall remove and dispose of all pavement designated for removal via rotomilling at the specified thickness. The rotomilling of pavement shall include removal of asphalt pavement at the tie-in point for new pavement, as designated on the plans.

The Contractor may choose to rotomill all existing asphalt within the project limits, as a method of pavement removal. However, only the areas specifically designated for rotomilling on the plans will be paid as rotomilling. Any other rotomilling not specifically called for shall not be paid in conjunction with pavement removal for the same section of removed asphalt pavement.

3.4.3 Method of Measurement: Rotomilling shall be measured by the square yard for the specified thickness.

3.4.4 Basis of Payment: The accepted quantities of rotomilling shall be paid for at the contract price per square yard.

3.5 Sidewalk Removal

3.5.1 Description: For furnishing all labor, materials and equipment necessary to remove sidewalk. The bid price shall include, but will not be limited to, all costs for removal and disposal of sidewalk as shown on the plans or as specified.

3.5.2 General Requirements: The Contractor shall remove and dispose of all sidewalk designated for removal, regardless of thickness. The removal of sidewalk shall include, but not be limited to, all concrete, asphalt pathway, or brick pavers used as a pedestrian walkway. The removal of sidewalk shall include any necessary saw cutting.

3.5.3 Method of Measurement: Sidewalk removal will be measured by the linear foot, regardless of width, as measured along the centerline of the length of the sidewalk.

3.5.4 Basis of Payment: The accepted quantities of sidewalk removal will be paid for at the contract price per foot.

4. WATER CONSTRUCTION

In addition to the Non-Reimbursable Items, Division A Section 12.3, the following general items apply to all water main pay items. These items are non-reimbursable and included in the cost of work.

General Items

References: Water main shall be designed, installed and tested per these standards and specifications, the latest revision of the "Recommended Standards for Water Works" as adopted by the Great Lakes-Upper Mississippi River Board of State and Provincial Public Health and Environmental Managers, the latest revision of applicable AWWA Standards, 327 IAC 8 requirements, IDEM and per the manufacturer's instructions.

Removal/Abandonment: Unless otherwise indicated on the plans or directed by the Engineer, existing water main, including hydrants, valves and appurtenances, shall be completely removed and disposed of by the Contractor. Existing water main to be abandoned-in-place shall be filled with flowable fill or other acceptable material. A written plan for abandonment must be submitted by the Contractor to the Engineer for approval.

Removed hydrants shall be salvaged and delivered to the City of Elkhart Public Works and Utilities, located at 1201 S. Nappanee St, Elkhart, Indiana 46516.

Alignment and Depth: All water mains shall have a minimum cover of five feet and shall have a maximum cover of six feet unless otherwise determined by the Engineer. All water mains shall be laid to the alignment and depth shown on the plans unless directed otherwise by the Engineer. All pipes shall be bedded firmly on undisturbed earth with bell holes excavated beneath the bells. Should the Contractor excavate to a depth below the invert of the pipe without the directions of the Engineer, the pipe shall be laid on shaped bedding with compacted granular fill between the pipe and undisturbed earth at the Contractor's expense.

Separation from Sewer Mains: A minimum of 10 feet of horizontal separation, outside pipe wall to outside pipe wall, shall be maintained between water main and sewer. A minimum of eight (8) feet horizontal separation shall be maintained between any sewer structure and water main. Sewer crossings with water main shall have a minimum vertical separation of 18". The Engineer may approve exceptions to these minimum requirements if the conditions outlined in Division B Section 5 "Separation from Water Mains" are met.

Proper Implementation: Proper implements, tools, and facilities shall be provided and used for the safe and convenient performance of the work. All pipe, fittings, valves and hydrants shall be lowered carefully into the trench in such a manner as to prevent damage to water main materials, protective coatings and linings. Under no circumstances shall water main materials be dropped or dumped into the trench or onto the ground or pavement.

Dewatering: Where necessary, the trench shall be dewatered prior to installation of the pipe. Discharge point and maximum rate (gallons per minute) are subject to approval by the Engineer prior to work.

Examination of Material: All pipes, fittings, valves, hydrants and other appurtenances shall be examined carefully for damage and other defects immediately before installation. Defective materials shall be marked and held for inspection by the Engineer, who may prescribe corrective repairs or reject the material

Pipe Ends: All lumps, blisters and excess coating shall be removed from the socket and plain ends of each pipe, and the outside of the plain end and the inside of the bell shall be wiped clean and dry and be free from dirt, sand, grit, or any foreign materials before the pipe is laid.

Cleaning and Swabbing: If dirt enters the pipe, it shall be removed and the interior pipe surface swabbed with a one percent hypochlorite disinfecting solution. If, in the opinion of the Engineer, the dirt remaining in the pipe will not be removed by the flushing operation, then the interior of the pipe shall be cleaned by mechanical means such as a hydraulically propelled foam pig or other suitable device acceptable to the Engineer, in conjunction with the application of a one percent hypochlorite disinfecting solution to the interior pipe surface. The cleaning method used shall not force mud or debris into the interior pipe-joint spaces and shall be acceptable to the Engineer.

Pipe Placement: As each length of pipe is placed in a dry trench, the joint shall be assembled and the pipe brought to correct line and grade. The pipe shall be secured in place with approved backfill material.

Pipe Plug: Open ends of pipe shall be closed by a watertight plug or other means approved by the Engineer when pipe-laying is not in progress. The plug shall be fitted with a means for venting. When practical, the plug shall remain in place until the trench is pumped completely dry. Care must be taken to prevent pipe flotation, should the trench fill with water. Prior to removal of the plug for extending the line or for any other reason, air and/or water pressure in the line shall be released.

Water Service Laterals: All newly installed laterals shall be inspected for approved materials, pressurized to the main pressure and visibly inspected for leaks.

All new water service laterals shall have a two-inch “W” for water cut or stamped into the curb. If curb is not available, it shall be cut or stamped into the sidewalk or the edge of pavement.

Water Service and Existing Well: City water service to a property with an existing well shall have the existing well abandoned or disconnected using one of the following methods:

1. Permanently abandon and concrete existing well.

2. Remove all internal plumbing within the home connecting to the well. This includes well pump and storage tank. Cut the piping from the well flush with the building wall, cap and seal with concrete.
3. Cut and remove piping between pump and holding tank and holding tank and service line, and install a backflow preventer before the water meter. This method must be approved by the City Engineer, and a drawing illustrating it must be submitted.

Meters and Yokes: Water meters shall be obtained from the Water Utility Billing Office. Meters that are two inches in diameter or less will be set by the Utility. Meters greater than two inches in diameter are the responsibility of the customer. Installations of isolation valves, above and below the meter, and meter yoke or loc-pac, are the responsibility of the customer.

No-Lead Brass Service Fittings and Valves: Any brass part of the fitting or valve in contact with potable water shall be made of a "No-Lead Brass", defined for this specification as UNS Copper Alloy No. C89520 or C89833 in accordance with the chemical and mechanical requirements of ASTM B584 and AWWA C-800. This "No-Lead Brass" alloy shall not contain more than nine one hundredths of one percent (0.09% or less) total lead content by weight.

All brass fittings and valves shall have the manufacturers name or trademark permanently stamped or cast on it. Another marking identifying the "no lead" brass alloy, e.g., 'NL', shall be cast or permanently stamped on the fitting or valve.

Backflow Preventers: Backflow prevention devices such as an air gap, reduced pressure backflow device, double check valve assembly, pressure type vacuum breaker, spill resistant vacuum breaker, or atmospheric vacuum breaker shall be required wherever there is potential for contamination from a cross-connection. All facilities listed in the Cross Connection Control Policy Section of the *Elkhart Public Works and Utilities Guide to Water Utility Policies* shall require the type of backflow prevention listed. Backflow preventers and their location shall be approved by the Utility before installation and shall be supplied and installed by the customer.

Flooding by Storm or Accident during Construction: If the main is flooded during construction, it shall be cleared of the flood water by draining and flushing with potable water until the main is clean. The section exposed to the floodwater shall then be filled with chlorinated potable water that, at the end of a 24-hour holding period, will have a free chlorine residual of not less than 25 mg/l. The chlorinated water may then be drained or flushed from the main. After construction is completed, the main shall be disinfected. This in no way relieves the Contractor from the Disinfection procedure in Division B Section 10.1.2.2: Disinfection.

Backfill: The Contractor shall not backfill water main above the top of the pipe until the alignment and the pipe joints have been checked, inspected and approved by the Engineer.

Initial and final backfill material shall be material originally excavated from the trench, with the following exceptions: peat/organic soil, marl soil and frozen material shall not be used as

backfill material. Clay is acceptable backfill material, if compacted properly, but is not allowed in areas of pavement subgrade. A depth of one foot of suitable subgrade material shall be required. Other soils may not be acceptable, as identified by the Engineer.

Initial Backfill: All main, as soon as laid, shall have the space between the pipe and the bottom and sides of the trench packed full by hand and thoroughly tamped and compacted as fast as placed, in lifts not to exceed four inches up to a depth of at least eight inches above the top of pipe. The initial backfill shall be carried up evenly on both sides. Care shall be taken that no rock, frozen material, or other hard substances are placed in contact with the pipe.

Initial backfill shall be compacted using hand or mechanical tamping device to a minimum of 90 percent of the maximum dry density. During compaction operations, care shall be taken to ensure that the tamping or vibratory equipment does not come in contact with the pipe and the pipe is not damaged or displaced.

Final Backfill: The remainder of the trench shall be backfilled to a height slightly above the original elevation of the ground. Final backfill shall be made in lifts not exceeding 24 inches in depth.

No heavy rock shall be dropped into the trench, nor placed within three feet of the pipe. In depositing rock, care shall be taken that the rock does not damage the structure or pipe. Any voids between pieces of rock shall be filled with earth.

Backfilling shall not be left unfinished more than 600 feet behind the completed structure or pipe work.

Final backfill shall be compacted and tested in accordance with Section 10.3: Compaction Testing. The Contractor shall secure the services of a qualified testing firm to perform the above compaction testing. Test results shall be furnished to the Engineer and shall be certified by a professional Engineer licensed in the State of Indiana. Costs for testing shall be merged into respective water main items.

Valve Operation: The Contractor shall obtain written permission from the Engineer and the Distribution Supervisor prior to operating any valve. All main valves and hydrant valves shall be operated by the Contractor and opened at the end of Work.

Filling: The Contractor shall obtain written permission and coordinate with the Engineer and Distribution Supervisor prior to filling the water main.

Disinfection: Pipe shall be disinfected per the latest revision of AWWA Standard C-651. General disinfection of new water mains and fixtures will be the obligation of the Contractor in charge of the installation. It is the Contractor's responsibility to make arrangements with the City to collect samples and perform testing at least 48 hours in advance, with analysis done on Monday through Thursday. All disinfection and sampling for testing shall be done in accordance with Division B Section 10.1.2.3: Disinfection.

Hydrostatic Pressure Testing: All new water main shall be subject to hydrostatic pressure testing in accordance to Division B Section 10.1.2.1: Hydrostatic Pressure Test.

Flushing: All newly installed water main shall be flushed under the supervision of a Water Utility Representative and in accordance with Division B Section 10.1.2.2: Disinfection.

Fire Flow Testing: New water main shall be flow tested when directed by the Engineer. When required, flow testing shall be conducted in accordance to Division B Section 10.1.2.4: Fire Flow Test.

Conflict with Existing Utilities: The location of proposed water main may need to be shifted during the course of construction to avoid conflicts with existing utilities whose exact locations are not known. Changes in alignment must be reviewed and approved in writing by the Engineer. No additional compensation will be allowed for changes in the water main alignment to avoid such conflicts. In general, the Contractor shall locate all existing utilities prior to the start of the construction.

Installation by Bore and Jack Method: Refer to Division B Section 5.5: Boring and Jacking Pipe under Sanitary and Storm Sewer Construction.

Dead Ends and Stubs: Dead end water mains and/or stubs shall consist of a valve, followed by a hydrant, followed by one full section of pipe and a restrained plug at the end. All joints shall be restrained past the valve.

4.1 Ductile Iron Water Main

4.1.1 Description: For furnishing and installing complete and in place, all labor, materials and equipment necessary for the construction of ductile iron pipe for water main. The bid price shall include, but not be limited to, all costs for all pipe of the required sizes, joint materials, joint restraint, connection sleeves to existing main(s), installation of pipe, backfill material, excavation and backfill, dewatering, removal and disposal or abandonment of existing water main, miscellaneous restoration as required or shown on the plans, sheeting, shoring, protection of existing structures, testing, cleanup and all other operations necessary to complete the work as shown on the plans or as specified, and shall include all applicable general items of Division B Section 4 and non-reimbursable items listed in Division A Section 12.3.

4.1.2 General Requirements: The ductile iron pipe and fittings shall conform to ANSI/AWWA C151/A21.51-91, ANSI/AWWA C111/A21.11-85 and ANSI/AWWA C150/A21.50-91. Sizes 12 inch nominal diameter and smaller shall be Class 52. Sizes 16 inch nominal diameter and larger shall be Class 51.

Backfilling shall be in accordance with Division B Section 4: Water Construction, General Items

Each pipe shall have the weight and class designation conspicuously painted on it. In addition, each pipe shall have painted on it the manufacturer's mark and the year in which the pipe was cast. The size of the letters and figures shall be as large as practicable.

All pipe shall be furnished with "push on" type joints utilizing rubber gaskets to obtain a tight seal. Joints shall comply with all applicable provisions of the latest revision of AWWA Standard C-111. Joint lubricant shall be furnished by pipe manufacturer. Mechanical joint end, AWWA Standard C-111, may be substituted for push on joint pipe ends. All joint materials shall be furnished by the pipe manufacturer. Brass wedges, containing no lead, shall be provided on all joints for electrical continuity.

All pipe shall be furnished with 1/16 inch thickness cement mortar linings, which conform in all respects to the latest revision of AWWA Standard C-104. Cement mortar lining shall be provided with a seal coat. Pipe shall be bituminous coated on the outside.

Pipe shall be as manufactured by Clow, United States Pipe and Foundry, American Cast Iron Pipe Company, Griffin, or approved equal.

4.1.3 Method of Measurement: Water main shall be measured by the linear foot along the centerline of the pipe from fitting center to fitting center.

4.1.4 Basis of Payment: The accepted quantities of water main shall be paid for at the contract unit price per linear foot. A complete record drawing meeting the Standard Construction Specifications for the City of Elkhart, Division B Section 11: Record Drawings must be submitted to the Engineer before any water mains are accepted.

4.2 Ductile Iron Fittings

4.2.1 Description: For furnishing and installing complete and in place, all labor, materials, and equipment necessary for the installation of new ductile iron fittings as described in the project specifications. The bid price shall include, but not be limited to, all costs for all fittings, joint material, installation of fittings, backfill material, excavation and backfill, dewatering, removal and disposal or abandonment of existing water main, miscellaneous restoration, concrete thrust blocking or retaining glands as required or shown on the plans, sheeting, shoring, protection of existing structures, testing, cleanup and all other operations necessary to complete the work as shown on the plans or as specified, and shall include all applicable general items of Division B Section 4 and non-reimbursable items listed in Division A Section 12.3.

4.2.2 General Requirements: The fittings to be furnished under this item shall comply with all applicable provisions of the latest revision of AWWA Standard C153 for compact fittings and C-111 for full body fittings. Fittings shall be Class 350.

Each fitting shall have distinctly cast upon it the following information: manufacturer's mark, nominal diameters of all openings and the fraction of the circle on all bends. The letters and figures shall be cast on the outside and shall be as large as practicable.

Fittings shall be as manufactured by Clow, United States Pipe, American Cast Iron Pipe, Griffin Tyler Pipe, or approved equal.

All fittings shall be furnished with mechanical joint ends as per the latest revision of AWWA Standard's C-111 and C-153. At joints where restraint is required, set screw or approved retaining gland will be used and standard mechanical joint glands shall be omitted. Set screw glands shall have square-head with type C knarled cup points, shall be manufactured of 4140 grade alloy steel and shall be heat treated to Rockwell "C" 45/83 core hardness.

Restraint for additional lengths of pipe beyond fittings shall be calculated using the AWWA / D.I.P.R.A. method of thrust calculations. Where additional restraint is necessary mechanical joint pipe with retainer glands shall be used in place of slip joint pipe.

Thrust Blocks, Field Lok, or Fast Grip gaskets may be used as an alternate to mechanical joint pipe with retainer gland for additional thrust restraint. The cost for retaining glands, thrust blocks, Field Lok, or Fast Grip gaskets shall be merged in other water main items. There will be no separate payment for these items.

Fittings shall meet the following requirements:

- Lining and Coating of Fittings. The fittings under this item shall be furnished with 1/16 inch thickness cement mortar linings, which conform in all respects to the latest revision of AWWA Standard C-104. The cement mortar lining shall be provided with a seal coat. Pipe and fittings shall be bituminous coated on the outside.

- Mechanical Joint Retaining Glands. Glands shall conform to applicable portions of the latest revision of AWWA Standard C-110, latest revision and shall be manufactured from ductile iron.

    - Each gland shall have sufficient square head, with cup point, double heat treated parkerized steel set screws that, when the screws are installed with 75 foot pounds of torque, the cup points will bite into the surface of the pipe and prevent blow off or movement of the joint at line pressures up to 200 psi.

    - Mechanical Joint Restraint shall be Clow F1058, EBAA 1100 Mega Lug style, Ford Series 1400, or approved equal.

- Alternate joint restraint systems other than those discussed above shall only be substituted after review and approval by the Engineer.

4.2.3 Method of Measurement: Ductile iron fittings shall be paid for per unit installed according to plans, or as directed by the Engineer. Full body fittings will be allowed as an alternate at no additional cost.

4.2.4 Basis of Payment: The accepted quantities of ductile iron fittings shall be paid for at the contract unit price per item.

4.3 Gate Valves & Boxes

4.3.1 Description: For furnishing and installing complete and in place, all labor, materials, and equipment necessary for the installation of new gate valves of various sizes and valve boxes as described in the project specifications. The bid price shall include, but not be limited to, gate valves, valve boxes, connecting pipe, joint materials, installation of pipe and fittings, backfill material, excavation and backfill, dewatering, miscellaneous restoration, concrete blocking as required or shown on the plans, sheeting, shoring, protection of existing structures, testing, cleanup and all other operations necessary to complete the work as shown on the plans or as specified, and shall include all applicable general items of Division B Section 4 and non-reimbursable items listed in Division A Section 12.3.

4.3.2 General Requirements: Gate valves are to be used only on water mains whose nominal diameter is 12 inch or less. All gate valves furnished under this item shall conform to the latest revision of AWWA Standard C-509, unless otherwise specified. Valves shall be Clow, Mueller, or approved equal.

All gate valve end connections shall be mechanical joint with non-rising stem and shall open left with operating nut two inch square. Exposed bolts and hex nuts shall be 304 stainless steel. All gate valves furnished under this item shall conform to the latest revision of AWWA Resilient Seated Gate Valve Standard C-509 and be UL listed, FM approved.

All internal parts shall be accessible without removing the body from the line.

The wedge shall be cast iron, completely encapsulated with resilient material. The resilient sealing material shall be permanently bonded to the cast iron wedge with a rubber tear bond to meet ASTM D429.

Stems shall be cast bronze with integral collars in compliance with AWWA C-509. The stuffing box shall have two O-ring seals above the thrust collar and one below. The top two O-rings shall be field replaceable without removing the valve from service.

There shall be low friction thrust bearings above and below the stem collar. The stem nut shall be independent of the wedge and of solid bronze. The waterway in the seat area shall be smooth, unobstructed, free of cavities and for valves four inch and larger at least 0.19 inch or greater in diameter than normal valve size.

The body and bonnet shall be coated, both interior and exterior, with a fusion bonded, heat cured, thermo setting material meeting all application and performance requirements of AWWA Standard C-550.

The gasket seal between two surfaces shall employ the use of O-ring type gaskets retained to prevent the possibility of blowout.

Each valve shall be hydrostatically tested by the manufacturer to 500 psi to the requirements of both AWWA C-509 and UL/FM and shall be rated for 250 psi AWWA service 2 inches - 12 inches.

The valve box shall be two-piece, screw type, with a 5 ¼ inch shaft. The top section, with cover, shall be marked "Water". The lower section, with enlarged base, shall make up the valve box. The box shall be adjustable from 39 inches to 60 inches, with at least 12 inches of adjustment available and shall be manufactured by Tyler Pipe Industries, model 664-S, or approved equal.

4.3.2 Method of Measurement: Gate valves and boxes shall be measured by the unit.

4.3.3 Basis of Payment: The accepted quantities of gate valves and boxes, furnished and installed, shall be paid for at the contract price per unit.

4.4 Butterfly Valves & Boxes

4.4.1 Description: For furnishing and installing complete and in place, all labor, materials, and equipment necessary for the installation of new butterfly valves and valve boxes as described in the project specifications. The bid price shall include, but not be limited to, all cost for butterfly valves, valve boxes, connecting pipe, joint materials, installation of pipe and fittings, backfill material, excavation and backfill, dewatering, miscellaneous restoration, concrete blocking as required or shown on the plans or as specified, sheeting, shoring, protection of existing structures, testing, cleanup and all other operations necessary to complete the work as shown on the plans or as specified, and shall include all applicable general items of Division B Section 4 and non-reimbursable items listed in Division A Section 12.3.

4.4.2 General Requirements: Butterfly valves are to be used on water mains whose nominal diameter is 16 inch or larger. All butterfly valves furnished under this item shall be rubber-seated, mechanical joint end connections complete with gaskets, followers and bolts and shall conform to the latest revision of AWWA Standard C-

504 unless otherwise specified herein. Exposed bolts and hex nuts shall be 304 stainless steel. Valves shall be manufactured by Clow, Kennedy, or approved equal.

Diameter of the clear waterway opening through each valve shall not be less than the nominal size of the valve (in inches) less one inch.

Laying length dimensions need not conform to AWWA Standards. Shafting material and size need not conform to AWWA Standards provided higher strength corrosion resistant shaft material resulting in a greater safety factor than provided by AWWA Standards is used. End connections shall conform to the latest revision of AWWA Standard C-111. Shaft materials and size are to be stated on drawings.

Valves shall be installed underground in horizontal lines. Shafts shall be installed horizontally. Gear boxes shall be securely mounted to the valves and shall be fully submersible enclosed type having AWWA Standard two inch square valve operating nuts. Gear boxes to be Philadelphia Gear Corporation or equal. Gear boxes are to be factory filled with the correct grade and amount of lubricant.

All valves shall be rated for a working pressure of 200 psi, and hydrostatically tested at a pressure of 400 psi in accordance with AWWA C-504.

The valve box shall be two-piece, screw type, with a 5¼ inch shaft. The top section, with over, shall be marked "Water". The lower section with enlarged base shall make up the valve box. The box shall be adjustable from 39 inches to 60, with at least 12 inches of adjustment available inches. The box shall be Tyler Pipe Industries 664-S or approved equal.

4.4.3 Method of Measurement: Butterfly valves and boxes shall be measured per unit.

4.4.4 Basis of Payment: Butterfly valves and boxes shall be paid for at the contract price per unit.

4.5 Tapping Valves & Sleeves

4.5.1 Description: For furnishing and installing complete and in place, all labor, materials, and equipment necessary for the installation of tapping valve as described in the project specifications. The bid price shall include, but not be limited to, all cost for the tapping valve, valve box, tapping sleeve, connecting pipe, joint materials, installation of valve, sleeve and fittings, backfill material, excavation and backfill, miscellaneous restoration, concrete blocking as required or shown on the plans, sheeting, shoring, protection of existing structure, testing, cleanup and other operations necessary to complete the work as shown on the plans or as specified with the exception of the physical tapping operation itself, and shall include all applicable general items of Division B Section 4 and non-reimbursable items listed in Division A Section 12.3.

4.5.2 General Requirements: Tapping of Main: The physical tapping of a water main currently in service shall be performed by City personnel or by a Contractor approved by the Engineer. When the City is performing the tap the Contractor shall request, in writing, the tapping connection 48 hours prior to the work being performed. All excavation and preparation work shall be performed by the Contractor. The Contractor shall provide all materials. The City will only perform the physical tap of the main.

4.5.2.1 Tapping Valves

All tapping valves furnished under this item shall conform to the latest revision of AWWA Standard C-509, unless otherwise specified. Valves shall be Clow, Mueller, or approved equal. All tapping valves shall be blocked.

The tapping valves shall be of the type suitable for installation with the corresponding tapping sleeves and are not to be confused with standard gate valves. Valves shall be compatible with the City of Elkhart's tapping equipment.

End connections shall conform to the latest revision of AWWA Standard C-111 for mechanical joints. All valves shall have resilient wedge with mechanical joint ends, 200 psi working pressure, non-rising stem, O-ring seals, shall open left (counter clockwise) with an operating nut, and shall have two inch square wrench nut. Exposed bolts and hex nuts shall be 304 stainless steel.

All valve stems shall be high strength manganese bronze having a minimum tensile strength of 80,000 psi, minimum yield strength of 32,000 psi and a minimum elongation of 15 percent in two inches.

Stem seals may be of the O-ring type.

All valves shall be rated for a working pressure of 200 psi and hydrostatically tested at a pressure of 400 psi in accordance with AWWA C-509.

The valve box shall be two-piece, screw type, with a 5 ¼ inch shaft. The top section, with cover, shall be marked "Water". The lower section, with enlarged base, shall make up the valve box. The box shall be adjustable from 39 inches to 60 inches. The box shall be Tyler Pipe Industries 664-S or approved equal.

A valve box extension shall permit extending the above valve box by 20 inches, or at a minimum finished grade, at all valve locations. The valve box extension shall be Tyler Pipe Industries or approved equal.

4.5.2.2 Tapping Sleeves

The tapping sleeves shall be built in two sections and designed to be assembled around the existing mains without halting service. Bolts for fastening together the two sections shall be closely spaced, located so as to assure uniform gasket pressure. Sleeves shall be 304 stainless steel Power Seal 3490 with stainless steel bolts and outlet flange, or an approved equal by the City, and shall be compatible with the City's tapping equipment.

The sleeve shall have distinctly displayed upon it the following information: 1) manufacturer's mark, 2) nominal diameters of all openings and the fraction of the circle on all bends. The letters and figures shall be displayed on the outside and shall be as large as practicable.

4.5.3 Method of Measurement: Tapping valves and sleeves shall be measured by the unit.

4.5.4 Basis of Payment: The accepted quantities of tapping valves and sleeves shall be paid for at the contract price per unit.

4.6 Fire Hydrant Assembly

4.6.1 Description: For the furnishing and installing complete and in place, all labor, materials, and equipment for the installation of new fire hydrant assemblies as described in the project specifications. The bid price shall include, but not be limited to, all cost for a six inch hydrant, six inch gate valve, box, proper restraint, six inch ductile iron connecting pipe, fire hydrant tee at the main, fire hydrant extensions, one cubic yard of washed "O" stone for drainage, fittings, joint materials, installation of pipe and fittings, backfill material, excavation and backfill, dewatering, miscellaneous restoration, concrete blocking as required or shown on the plans, sheeting, shoring, protection of existing structures, testing, cleanup and all other operations necessary to complete the work as shown on the plans or as specified, and shall include all applicable general items of Division B Section 4 and non-reimbursable items listed in Division A Section 12.3. Where indicated on the plans, the removal, salvaging and delivery to Public Works of existing hydrant(s) shall be included in the bid price.

4.6.2 General Requirements: Approved fire hydrants are as follow:

- East Jordan Iron Works 5BR250
- Clow Medallion
- Mueller Super-Centurion
- Darling B-84-B

Any other fire hydrants must be approved by the Engineer.

All hydrants shall comply with all provisions of the latest revision of AWWA Standard C-502, shall have the following characteristics as shown in Table 4.1 and be approved by the Engineer.

Table 4.1
Hydrant Characteristics

Size of Hydrant Valve:	5-1/4"
Inlet Connection:	6"
Type of Inlet Joint:	M.J.
Barrel Inside Minimum Diameter:	6"
Barrel Metal Thickness:	9/16"
Bury Depth (ground to inlet connection):	5'-6"
Outlet Nozzles:	2-2 ½", 1-5" Stortz w/cap & chain
Paint Color:	Yellow
Opening Directions:	Clockwise
Operating Nut:	1-1/4" Pentagon

Nozzle threads to conform to ASA Specification B-26 for "National Standard Fire-Hose Coupling Screw Threads."

The Stortz Connection nozzle shall be an integral part of the fire hydrant assembly, resistant to tamper or removal by persons not familiar with fire hydrant construction. Add-on Stortz compatible adapters shall not be acceptable.

All working parts of the hydrant shall be removable from the top of the hydrant without digging and without the use of a lifting device or special tools. Hydrant top casting is to be removable without shutting off the auxiliary water inlet valve.

Fire hydrants shall be of the compression type closing with the line pressure. The valve opening shall be 5 ¼ inches in diameter. The main valve assembly shall be designed so that the bronze seat ring threads into a bronze bushing in the shoe allowing the seat ring to be removed from above ground without excavation.

The bonnet section shall be designed so all bearing surfaces and stem threads are sealed in a lubricant reservoir and automatically lubricated each time the hydrant is operated. Hydrant shall be shipped complete with lubricant.

The hydrant shoe shall have a six inch mechanical joint inlet and at least two drain outlets.

The depth of bury shall be five feet, six inches unless otherwise shown on the drawings.

Hydrants are to be furnished with a breakable feature that will break cleanly upon impact. This shall consist of a two-part breakable safety flange and stem coupling or breakaway lugs and breakaway stem coupling. It shall be designed to permit 360-degree rotation of the upper barrel without removal of the ground line flange bolts. Those depending on breakable bolts only at the ground line flange as a safety device will not be acceptable. The breakaway flange shall be zero to two inches above grade..

Until final acceptance, all hydrants must be covered with burlap or similar material.

4.6.3 Method of Measurement: Fire hydrant assemblies shall be measured by the unit.

4.6.4 Basis of Payment: The accepted quantities of fire hydrant assemblies, furnished and installed, shall be paid for at the contract price per unit.

4.7 Water Service Connections

4.7.1 Description: For furnishing and installing complete and in place, all labor, materials and equipment necessary for the installation of a municipal water service connection. The bid price shall include, but not be limited to, all costs for service tap, corporation stop, service line, curb box, curb stops, backfill material, excavation and backfill, dewatering, miscellaneous restoration, sheeting, shoring, protection of existing structures, testing, cleanup and all other operations necessary to complete the work as shown on the plans or as specified, and shall include all applicable general items of Division B Section 4 and non-reimbursable items listed in Division A Section 12.3.

4.7.2 General Requirements: Service connections shall be in accordance with the latest revision of AWWA Standard C-800 and with the following City of Elkhart standards.

Taps to the water main shall be made so that the corporation stop is installed 45 degrees from the vertical axis of the main. The corporation stop shall be a minimum of one inch (1”), contain no lead brass, have AWWA (CC) threads for the water main connection with the appropriate compression style copper tube size (CTS) outlet, and

shall be the following: Mueller Ground Key Corporation Value H-15008N, AY McDonald plug style corp stop 74701Q, or approved equal.

The service line shall be a minimum of one inch type K copper installed with 60 inches minimum, 72 inches maximum cover. The service line shall be laid 90 degrees to the main in a location to be determined by the Engineer in the field. Generally, the determined location shall be located near the property line appropriate for the most direct or shortest route from the service shut off to the home. The route shall be selected to avoid plantings, landscaping, driveways, sidewalks and other exterior appurtenances wherever possible. When applicable, the entry point to the home or business will also be field determined and will be as close as possible to the existing connection of the interior plumbing to the existing water well supply line.

All proposed water service leads that will cross beneath pavement that is not designated for removal shall be installed by boring or other acceptable methods which do not disturb the pavement or its support.

The service shut off/curb stop shall be 1", have a round way ground key stop, contain no lead brass, have compression (CTS) inlets and female iron pipe (FIP) size outlets, and shall be the following: Mueller Oriseal III Curb Valve with Muller 110 Conduction Compression Connection inlet H-1503-2N, AY McDonald plug style curb stop 76106Q, or approved equal. For sizes greater than 1" contact the Engineer.

The shut off box shall be Tyler Union 6500 Series 95E (30T+39B) or approved equal. The service shut off shall be located within the public right-of-way, beyond the edge of the pavement.

The valve box shall be installed at grade.

Exact locations of water services shall be determined in the field by the Engineer.

4.7.3 Method of Measurement: Water service connections shall be measured by the unit.

4.7.4 Basis of Payment: The accepted quantities of water service connections shall be paid for at the contract price per unit.

4.8 Meter Assembly

4.8.1 Description: For furnishing and installing complete and in place, all labor, materials and equipment for the installation of new meter assemblies as described in the project specifications. The bid price shall include, but not be limited to, all service house leads, pressure reducing valves, meter assemblies including remote reading devices, backflow preventers, all necessary interior plumbing alterations to connect the home or business to the water main, backfill material, excavation and backfill, dewatering, miscellaneous restoration, sheeting, shoring, projection of existing

structures, testing, cleanup and all other operations necessary to complete the work as shown on the plans or as specified, and shall include all applicable general items of Division B Section 4 and non-reimbursable items listed in Division A Section 12.3.

4.8.2 General Requirements: Meter assemblies shall be as shown on the detail drawing and shall conform to the City's minimum requirements in every way. Meter shall be 5/8 inch Neptune Model T-10 E-Coder R900i meeting the City's approval. Meters shall under no circumstances be installed in a crawl space or meter pit or any other location which may be defined as a confined space or any space that is not heated. Meters shall be installed in such a way to allow access for inspecting, testing or servicing from floor level.

Water pressure reducing valves may be required in some installations. Pressure reducing valves will be manufactured by Watt Industries, Model No. U5 or U5B for sizes ½ inch to 2 inches will be suitable for initial pressures up to 300 psi with a reduced pressure range of 25-75 psi and will be set for 50 psi at the factory. Installation of pressure reducing valves shall be as directed by the Engineer.

Back flow preventers shall be approved by the University of Southern California Foundation for Cross-Connection Control and Hydraulic Research (USC-FCCHR) and shall be installed on individual property services as directed by the Engineer in accordance with the City of Elkhart Water Utility Policies and Indiana Department of Environmental Management.

If present, cross-connections to all plumbing shall be permanently eliminated inside the building. All plumbing shall be performed by or under the direct supervision of a plumber licensed by the State of Indiana. The Contractor will obtain all needed permits and schedule the required inspection by the local agency. Plumbing shall be in accordance with the Uniform Building Code with Indiana Amendments and may be subject to local code requirements.

Where homes are found to have a water recirculating home heating or cooling system (heat pump), the Engineer shall be notified so that elimination of cross connections to the potable supply lines can be properly verified or approved.

The Contractor shall have an emergency potable water supply available at all times in case part of the City water system has to be shut down after homes have been connected.

4.8.3 Method of Measurement: Meter assemblies shall be measured by the unit.

4.8.4 Basis of Payment: The accepted quantities of meter assemblies shall be paid for at the contract price per unit.

4.9 Horizontal Directional Drilling (HDD) HDPE Pipe

4.9.1 Description: For furnishing and installing by complete and in place, all labor, materials and equipment for the construction, by horizontal direction drilling method, of HPDE water main of the respective sizes as described in the project specifications. The bid price shall include, but not be limited to, all costs for all pipe of the required sizes, joint materials, MJ Adapters, Fusion Couplers, installation of pipe, tracer wire, tracer wire station, backfill material, excavation and backfill, dewatering, removal and disposal or abandonment of existing water main, miscellaneous restoration, sheeting, shoring, protection of existing structures, testing, cleanup and all other operations necessary to complete the work as shown on the plans or as specified, and shall include all applicable general items of Division B Section 4 and non-reimbursable items listed in Division A Section 12.3.

The City does not allow HDD of HDPE pipe except in situations where access for regular excavation is impractical as determined by the Engineer.

4.9.2 General Requirements: HDPE pipe for horizontal directional drilling shall be HDPE AWWA C906 DIPS and a Dimension Ratio (DR) of 11 (DR-11) unless otherwise indicated on the drawings. The pipe shall contain no recycled compound except that generated in the manufacturer's own plant. The pipe shall be homogeneous throughout and free of visible cracks, holes, gouges, voids, foreign inclusions, or other defects that may affect the wall integrity. The materials shall be listed by the Plastic Pipe Institute (PPI), a division of the Society of the Plastic Industry in PPI TR-4 with a 73º F hydrostatic design basis of 1,600 psi and a 140º F hydrostatic design basis of 600 psi. The PPI listing shall be in the name of the pipe manufacturer and shall be based in ASTM D 2837 testing.

A minimum of three #10 gage solid copper core tracer wire shall be laid with all HDPE water main. Tracer wire shall be insulated and rated for underground service. The tracer wire shall be attached to the main at a maximum of 25 foot intervals. The tracer wire shall be connected to all valves and fire hydrant flange bolts. All spliced or repaired wire connections in the tracer wire system shall be made using a wing nut wire connector for two to four #10 wires and made waterproof using an approved buried service wire closure. The buried service wire closure shall be a Klik-It II Number C8816 Buried Service Wire Closure or approved equal. The Contractor shall ensure that the tracer wire attached to the main is functional by performing a continuity test after the installation is complete. Locator hook-up points shall be installed along the tracer wire/pipe at intervals not to exceed 500 feet in all unpaved areas, and as close as practical on either side of a waterway or pavement crossing. Locator hook-up points shall be installed and marked using markers manufactured by RhinoDome Test Station, Rhino TriView Test Station, or approved equal. Markers shall be colored blue and marked "Warning Water Pipeline". The tracer wire shall be tested by the City of Elkhart for continuity prior to accepting the water main.

4.9.3 Method of Measurement: Water main shall be measured by the linear foot along the centerline of the pipe.

4.9.4 Basis of Payment: The accepted quantities of water main shall be paid for at the contract unit price per linear foot. A complete record drawing meeting the Standard Construction Specifications for the City of Elkhart, Division B Section 11: Record Drawings must be submitted to the Engineer before any water mains are accepted.

4.10 HDPE Fittings

4.10.1 Description: For furnishing and installing complete and in place, HDPE pipe fittings as described in the project specifications. The bid price shall include, but not be limited to, all costs for all fittings, joint material, installation of fittings, backfill material, excavation and backfill, dewatering, removal and disposal or abandonment of existing water main, miscellaneous restoration, sheeting, shoring, protection of existing structures, testing, cleanup and all other operations necessary to complete the work as shown on the plans or as specified, and shall include all applicable general items of Division B Section 4 and non-reimbursable items listed in Division A Section 12.3.

4.10.2 General Requirements: HDPE fittings shall be PE3408 HDPE, Cell Classification of 345464C as determined by ASTM D3350-and approved for AWWA use. Butt fusion fittings shall have a manufacturing standard of ASTM D326a. Molded and fabricated fittings shall have a pressure rating equal to the pipe unless otherwise specified in the plans. Fabricated fittings are to be manufactured using a Data Logger to record temperature and fusion pressure and a graphic representation of the fusion cycle shall be made part of the Quality Control records. All fittings shall be suitable for use as pressure conduits, and per AWWA C906, have minimal burst values of 3 ½ times the Working Pressure Ratings (WPR) of the fittings.

The only HDPE fitting that the City of Elkhart will allow is a HDPE DIP adapter.

4.10.3 Method of Measurement: HDPE fittings shall be paid for per unit installed according to plans, or as directed by the Engineer.

4.10.4 Basis of Payment: HDPE fittings shall be paid for per unit installed according to plans, or as directed by the Engineer.

5. SANITARY AND STORM SEWER CONSTRUCTION

In addition to the Non-Reimbursable Items, Division A Section 12.3, the following general items apply to all sewer pay items. These items are non-reimbursable and included in the cost of work.

General Items

Terminology: Unless otherwise specified, the term "sewer" shall refer to all storm, sanitary and combined sewer systems.

References: Sewer shall be designed, installed and tested per these standards and specifications, the latest revision of the "Recommended Standards for Wastewater Facilities" as adopted by the Great Lakes-Upper Mississippi River Board of State and Provincial Public Health and Environmental Managers, the latest revision of applicable ASTM Standards, 327 IAC 3 requirements, IDEM and per the manufacturer's instructions.

Removal/Abandonment: Unless otherwise indicated on the plans or directed by the Engineer, existing sewer systems, shall be completely removed and disposed of by the Contractor. Existing sewer systems to be abandoned-in-place shall be filled with flowable fill or other acceptable material. Structures, manholes and catch basins to be abandoned-in-place shall be cut a minimum of three feet below final grade, filled with flowable fill or other acceptable material and capped. A written plan for abandonment must be submitted by the Contractor to the Engineer for approval.

Removed manhole and catch basin castings/covers shall be salvaged and delivered to the City of Elkhart Public Works Sewer Department, located at 1201 S. Nappanee St, Elkhart, Indiana 46516.

Alignment and Depth: Sewer shall be installed with a straight alignment between manholes. Curvilinear alignments shall not be permitted. All sewers shall be laid to the alignment and depth shown on the plans unless directed otherwise by the Engineer. In general, sanitary and combined sewers shall be placed with a minimum depth of three feet of cover.

Separation from Water Mains: A minimum of 10 feet of horizontal separation, outside pipe wall to outside pipe wall, shall be maintained between water main and sewer. A minimum of eight (8) feet horizontal separation shall be maintained between any sewer structure and water main. Sewer crossings with water main shall have a minimum vertical separation of 18".

In situations where it is not possible to maintain 10 feet of horizontal separation, or 18" of vertical separation at crossings, between water and sewer mains less separation is allowable if the following conditions are met:

- It is approved by the Engineer
- The sewer pipe material is Ductile Iron or C900 PVC SDR 25
- The sewer joints are compression type joints placed equidistant from the water main

- The sewer and water main are laid on separate trench shelves
- The sewer and water mains are not in contact
- The sewer is tested to the water main pressure test described in Division B Section 10

In situations where it is not possible to maintain eight (8) feet of horizontal separation between sewer structures and water main less separation is allowable if the following conditions are met:

- It is approved by the Engineer
- The water main is encased in a casing pipe or the structure is coated with a waterproof epoxy coating

Manhole Spacing: Manholes shall be installed no more than 400 feet apart for pipes under 24 inches and 500 feet apart for larger pipes.

Monitoring Manholes: Monitoring (control) manholes shall be installed on all sewer laterals servicing commercial or industrial facilities, unless otherwise approved by the City . Unless constructed as part of a City project, installation of these manholes is at the developer's/property owner's expense. Materials shall be as listed in Division B Section 5.10, with the exception that lids are not required to be labeled.

Pipe Size and Slope: The minimum gravity pipe size for public sanitary or combined sewer shall be eight inches.

When a smaller sewer joins with a larger sewer, the invert elevations of the sewers shall be such that the 0.8 depth point of both sewers is at the same elevation.

Sewers shall be constructed with a uniform slope between manholes, and such that the mean velocity when flowing full is not less than two feet per second, for Sanitary/Combined Sewers, and three feet per second for storm sewers, based on Manning's formula using an "n" value of 0.13. Pipe slopes greater than the minimum shall be used whenever conditions permit. Minimum slopes are shown in the following Table 5.1:

Table 5.1
Minimum Slopes

Nominal Sewer Size, (inches)	Sanitary Sewer Min. Slope, (feet/100 feet)	Storm Sewer Min. Slope, (feet/100 feet)
8	0.400	N/A
10	0.280	N/A
12	0.220	0.44
15	0.150	0.32
18	0.120	0.26
21	0.100	0.21
24	0.080	0.17
30	0.058	0.13

36	0.046	0.10
42	0.037	0.08

Drop Connections: Drop connections shall be provided at sanitary manholes where the influent pipe invert elevation is 24 inches, or more, above the effluent pipe invert elevation. Drop connections shall be external to the manhole and shall extend up to the ground surface. Drop connection sizes are shown in the following Table 5.2:

Table 5.2
Drop Connection Sizes

Sewer Size, (inches)	Drop Size, (inches)
Up to 10	6
12 to 18	10
21 to 30	18
36 to 42	24

Connections to Existing Pipe: A leak-proof connection approved by the Engineer shall be used for all connections to existing pipe.

Proper Implementation: Proper implements, tools, and facilities shall be provided and used for the safe and convenient performance of the work. All pipe and precast manhole sections shall be lowered carefully into the trench in such a manner as to prevent damage to materials. Under no circumstances shall materials be dropped or dumped into the trench or onto the ground or pavement.

Dewatering: All pipes must be installed in a dry trench. When necessary, the trench shall be dewatered before installation of pipe. Discharge point and maximum rate (gallons per minute) is subject to approval by the Engineer prior to work.

Pipe Placement: As each length of pipe is placed in the trench, the joint shall be assembled and the pipe brought to correct line and grade. Straight alignment shall be checked by either using a laser beam or lamping. The pipe shall be secured in place with approved backfill material and protected from movement.

Sewer Service Laterals and Cleanouts: Flexible Couplings Connectors: When connecting laterals to pipe of differing material a high performance flexible coupling shall be used. Private service laterals shall be PVC SDR 35 pipe for six inch when in the Public Right-of-Way. All lateral connections shall meet or exceed the current Building Officials & Code Administrators National Plumbing Code. All laterals in the Public Right-of-Way shall be six inch.

Laterals on private property may be schedule 40 pipe for four inch.

At all changes in pipe size an accessible cleanout will be installed with its diameter equal to the larger of the two pipes. A minimum of one outside cleanout shall be installed. Accessible

cleanouts shall be located not more than 100 feet apart. Accessible cleanouts shall be installed at each aggregate change in direction of 135 degrees. All cleanouts shall be adjusted to grade and capped and any cleanouts located within a paved surface shall have cast iron frames and covers. All cleanouts shall be a Tee in the lateral. No WYEs shall be used.

All new laterals shall be tested in accordance with Division B Section 10.2.2.6: Service Lateral Testing.

Sewer Service Lateral Connections: Owners/Contractors making physical connections for sewer services to residential, commercial, industrial, or other entities shall adhere to the following requirements:

- Assessments: Sewer assessments shall be paid before private laterals may be connected to sanitary sewers.
- Agreement: On properties outside the City limits, sewer service agreements shall be signed and on file with the City before private laterals can be connected.
- Excavation Permit: The Contractor must have an excavation permit before any work in the City Public Right of Way commences for any connection to City sewer. The Contractor shall have an excavation permit even if the site is in the County or if a new street has yet to be dedicated to the City. Absolutely no excavation permits will be issued until the sewer assessment has been paid. All properties shall have a detailed drawing showing placement of the sewer lateral from the connection to the sewer main to the connection at the building.
- Building Department Regulations: An excavation permit does not eliminate the requirement to meet the City Building Department's regulations. All lateral connections shall meet or exceed the current Building Officials & Code Administrators National Plumbing Code. All sewer taps must be inspected by the Engineer.
- Septic Tanks and Dry Wells: All septic tanks and dry wells shall be pumped empty, the top shall be removed, the bottom shall be crushed and the tank shall be filled with inert fill. This shall be inspected by the Engineer.
- Notice for Inspection Request: Two hours minimum notice is requested for inspections.
- All sanitary sewer laterals shall have a two-inch “Y” for sewer cut or stamped into the curb. If no curb is available, it shall be cut or stamped into the sidewalk or edge of pavement.

Backfill: The Contractor shall not backfill sewers above the top of the pipe until the sewer elevations, gradient, alignment and the pipe joints have been installed correctly. The Engineer shall retain the capacity to check, inspect and approve all sewer elevations, gradient, alignment and pipe joints at any time during construction.

- **Initial Backfill:**
  Initial backfill shall be compacted using hand or mechanical tamping to a minimum of 90% of the maximum dry density. During compaction operations, care shall be

taken to ensure that the tamping or vibratory equipment does not come in contact with the pipe and the pipe is not deformed or displaced.

- **PVC Pipe:**
  The initial backfill material shall be # 8 thru # 11 crushed stone. The stone must be crushed. Natural smooth-surfaced stone (e.g. pea gravel) shall not be allowed.

  Initial backfill shall be placed in two stages: one to the top of the pipe and the other to a point six inches over the top of the pipe. Initial backfill shall be placed in the space between the pipe and bottom and sides of the trench to the spring line of the pipe and compacted. Precautions shall be taken to prevent movement of the pipe while placing material under the pipe haunch. After compaction is achieved, additional initial backfill material shall be placed from the spring line to a point six inches over the top of the pipe and compacted.

- **Ductile Iron, Rigid Concrete and Vitrified Clay Pipe:**
  Initial backfill material shall be material originally excavated from the trench, with the following exceptions: clay, peat/organic soil, marl soil, and frozen material shall not be used as backfill material. A depth of one foot of suitable subgrade material shall be required. Other soils may not be acceptable, as identified by the Engineer.

  Sewer pipe, as fast as laid, shall have the space between the pipe and the bottom and sides of the trench packed full by hand and thoroughly tamped and compacted, as fast as placed, in lifts not to exceed four inches up to a depth of at least eight inches above the top of pipe. The initial backfill shall be carried up evenly on both sides. Care shall be taken that no rock, frozen material, or other hard substances are placed in contact with the pipe.

- **Final Backfill:**

For all pipe materials, the remainder of the trench shall be backfilled to an approved elevation using material originally excavated from the trench, with the following exceptions: clay, peat/organic soil, marl soil, and frozen material shall not be used as backfill material. A depth of one foot of suitable subgrade material shall be required. Other soils may not be acceptable, as identified by the Engineer.

When backfill material is required to be brought to site the material shall be "B" borrow or better as approved by the Engineer.

No heavy rock shall be dropped into the trench, nor placed within three feet of the sewer pipe. In depositing rock, care shall be taken that the rock does not damage the structure or pipe. Any voids between pieces of rock shall be filled with earth.

Backfilling shall not be left unfinished more than 400 feet behind the completed structure or pipe work. Final backfill shall be made in lifts not exceeding two feet in depth.

Final backfill shall be compacted and tested in accordance with Division B Section 10.3: Compaction Testing. The Contractor shall secure the services of a qualified testing firm to perform the above compaction testing. Test results shall be furnished to the Engineer and shall be certified by a professional Engineer licensed in the State of Indiana. Costs for testing shall be merged into respective sewer main items.

Testing: All new sewer mains and structures shall be subject to testing and televising in accordance to Division B Section 10.2: Sewer Main Testing. Force mains shall be tested in accordance to Division B Section 10.1: Water Main Testing. Sewer mains not meeting the minimum separation requirements with water main shall be tested in accordance to Division B Section 10.1: Water Main Testing.

Conflict with Existing Utilities: The location of proposed sewer main may need to be shifted during the course of construction to avoid conflicts with existing utilities whose exact locations are not known. Changes in alignment must be reviewed and approved by the Engineer. No additional compensation will be allowed for changes in the sewer main horizontal alignment to avoid such conflicts unless approved by the Engineer. In general, the Contractor shall locate all existing utilities prior to the start of the construction.

5.1 Polyvinyl Chloride (PVC) Pipe – 15" Diameter and Smaller

5.1.1 Description: For furnishing and installing complete and in place, all labor, materials, and equipment necessary for the construction of PVC sewer pipe sizes 15 inch diameter and smaller. The bid price shall include, but will not be limited to, all costs for all pipe of the required sizes, joint materials, installation of pipe, backfill material, excavation and backfill, dewatering, removal and disposal or abandonment of existing sewer if applicable, coring of existing manhole if applicable, connection to manhole, miscellaneous restoration, sheeting, shoring, protection of existing structures, testing, cleanup and all other operations necessary to complete the work as shown on the plans or as specified, and shall include all applicable general items of Division B Section 5 and non-reimbursable items listed in Division A Section 12.3.

5.1.2 General Requirements: PVC Pipe shall conform to ASTM D3034 with bell and spigot joints. All PVC sewer joints shall use elastomeric seals (gaskets) and be water tight and meet the requirements of ASTM D3212. PVC pipe will not be allowed where depth of cover will be greater than 19 feet, without approval by the Engineer. The standard dimension ration (SDR) of PVC pipe shall be SDR 26 or SDR 35 in accordance with the following Table 5.3:

Table 5.3
SDR of PVC Pipe

Depth of Cover, (feet)	PVC SDR	
	26	35
5 – 10	X	X
10 – 14	X	X
15 – 19	X	

PVC fittings shall meet the requirements of ASTM D3034. PVC tee connections for laterals shall be manufactured to accept six-inch PVC pipe. Tee connections shall be installed and paid for in accordance with Division B Section 5.8: Service Lateral Tee Connections.

The pipe and fittings shall be homogeneous throughout and free from visible cracks, holes, foreign inclusions, or other injurious defects. The pipe shall be as uniform as commercially practical in color, opacity, density and other physical properties.

Installation of PVC pipe shall conform to ASTM D2321.

Backfilling shall be in accordance with the backfill requirements specified in this Chapter.

5.1.3 Method of Measurement: Sewer main shall be measured by the linear foot along the centerline of the pipe used. When the sewer main connects to manholes, inlets or catch basins, sewer main will be measured to the center of the structure.

5.1.4 Basis of Payment: The accepted quantities of pipe shall be paid for at the contract unit price per linear foot.

5.2 Ductile Iron Pipe (DIP)

5.2.1 Description: For furnishing and installing complete and in place, all labor, materials and equipment necessary for the construction of ductile iron pipe for sewer. The bid price shall include, but not be limited to, all costs for all pipe of the required sizes, joint materials, fittings, installation of pipe, backfill material, excavation and backfill, dewatering, removal and disposal or abandonment of existing sewer main, coring of existing manhole if applicable, connection to manhole, miscellaneous restoration, sheeting, shoring, protection of existing structures, testing, cleanup and all other operations necessary to complete the work as shown on the plans or as specified, and shall include all applicable general items of Division B Section 5 and non-reimbursable items listed in Division A Section 12.3.

5.2.2 General Requirements: The ductile iron pipe and fittings shall conform to ANSI/AWWA C151/A21.51-91, ANSI/AWWA C111/A21.11-85 and ANSI/AWWA

C150/A21.50-91. Sizes 12 inch nominal diameter and smaller shall be Class 52. Sizes 16 inch nominal diameter and larger shall be Class 51.

Backfilling shall be in accordance with the backfill requirements specified in this Section.

Tee connections shall be installed and paid for in accordance with Division B Section 5.89: Service Lateral Tee Connections.

5.2.3 Method of Measurement: Sewer main shall be measured by the linear foot along the centerline of the pipe used. When the sewer main connects to manholes, inlets or catch basins, sewer main will be measured to the center of the structure.

5.2.4 Basis of Payment: The accepted quantities of pipe shall be paid for at the contract unit price per linear foot.

5.3 Reinforced Concrete Pipe (RCP)

5.3.1 Description: For furnishing and installing complete and in place, all labor, materials and equipment necessary for the construction of reinforced concrete pipe for sewer. The bid price shall include, but will not be limited to, all cost for all pipe of the required sizes, joint materials, installation of pipe, backfill material, excavation and backfill, dewatering, removal and disposal or abandonment of existing sewer main, coring of existing manhole if applicable, connection to manhole, miscellaneous restoration, sheeting, shoring, protection of existing structures, testing, cleanup and all other operations necessary to complete the work as shown on the plans or as specified, and shall include all applicable general items of Division B Section 5 and non-reimbursable items listed in Division A Section 12.3.

5.3.2 General Requirements: Reinforced concrete pipe installed shall meet or exceed the criteria outlined in ASTM C76 for Class IV pipe. The curing of all reinforced concrete pipes to be used under the Contract shall be in accordance with ASTM specifications C 76-72. The pipe shall be cured for a sufficient length of time so that the concrete will develop the specified compressive strength within 28 days or less. However, under no circumstances will any pipe be accepted on the job site that is less than seven days old.

The pipe shall have joints of the tongue and groove type, with ‘O’ ring gaskets.

All connections to reinforced concrete pipe shall be by use of Kor-N-Tee.

Backfilling shall be in accordance with the backfill requirements specified in this Section.

Tee connections shall be installed and paid for in accordance with Division B Section 5.89: Service Lateral Tee Connections.

5.3.3 Method of Measurement: Sewer main shall be measured by the linear foot along the centerline of the pipe used. When the sewer main connects to manholes, inlets or catch basins, sewer main will be measured to the center of the structure.

5.3.4 Basis of Payment: The accepted quantities of pipe shall be paid for at the contract unit price per linear foot.

5.4 Vitrified Clay Pipe (VCP)

5.4.1 Description: For furnishing and installing complete and in place, all labor, materials and equipment necessary for the construction of vitrified clay pipe for sewer. The bid price shall include, but will not be limited to, all cost for all pipe of the required sizes, joint materials, installation of pipe, backfill material, excavation and backfill, dewatering, removal and disposal or abandonment of existing sewer, coring of existing manhole if applicable, connection to manhole, miscellaneous restoration, sheeting, shoring, protection of existing structures, testing, cleanup and all other operations necessary to complete the work as shown on the plans or as specified, and shall include all applicable general items of Division B Section 5 and non-reimbursable items listed in Division A Section 12.3.

5.4.2 General Requirements: Vitrified clay pipe shall meet or exceed the criteria outlined in the latest revision of ASTM C700.

The pipe shall have joints constructed of a flexible plastic material conforming to the latest revision of ASTM C425, using materials having resilient properties such as Wedgelock by Logan Clay Products Co. or an approved equal.

Fittings: Rubber gasket "TEE" connectors for VCP pipe shall meet ASTM C425 and produce a positive water tight connection for all pipes entering the main sewer. Tee connections shall be manufactured to accept six inch VCP. The location of these "TEE" connectors will be determined by the Engineer in the field.

Vitrified clay pipe shall be installed in accordance with ASTM C12.

Backfilling shall be in accordance the backfill requirements specified in this Section.

5.4.3 Method of Measurement: Sewer main shall be measured by the linear foot along the centerline of the pipe used. When the sewer main connects to manholes, inlets or catch basins, sewer main will be measured to the center of the structure.

5.4.4 Basis of Payment: The accepted quantities of pipe shall be paid for at the contract unit price per linear foot.

5.5 Boring and Jacking Pipe

5.5.1 Description: For furnishing and installing complete and in place, all labor, materials and equipment necessary for the construction, by bore and jack method, of pipe. The bid price shall include, but will not be limited to, all costs for both casing and carrier pipe of the required sizes, joint materials, installation of casing and carrier pipe, casing pipe end sealer, non-corrodible castings/rails/skids/spacers, backfill material, excavation and backfill, dewatering, removal and disposal or abandonment of existing sewer/water main, miscellaneous restoration, sheeting, shoring, protection of existing structures, testing cleanup and all other operations necessary to complete the work as shown on the plans or as specified, and shall include all applicable general items of Division B Section 5 and non-reimbursable items listed in Division A Section 12.3.

5.5.2 General Requirements: The casing pipe shall have minimum yield strength of 35,000 psi and be electric-fusion, arc-welded steel pipe in accordance with ASTM A 139, Grade B, or electric-resistance welded pipe in accordance with ASTM A 53, Type E, Grade B, as applicable. Material furnished under this specification shall be covered by a Type C certification in accordance with current INDOT Standard Specification, Section 916.

Joints between sections of casing pipe shall be fully welded around the complete circumference of the pipe.

Casing pipe diameter and wall thickness shall be based on the following Table 5.4:

Table 5.4
Casing Pipe Diameter & Wall Thickness

Carrier Pipe Nominal Diameter, (inches)	Casing Pipe Outside Diameter, (inches)	Casing Pipe Wall Thickness, (inches)
6	16	.281
8	18	.312
10	20	.344
12	24	.375
16	30	.469
18	32	.500
20	36	.532
24	42	.625
30	48	.688
36	54	.781
42	60	.844

Non-corrodible castings (rails/skids) or spacers shall be inserted with the carrier pipe. The castings/spacers shall provide adequate height and support such that no part of the carrier pipe (bell) is in contact with the casing pipe.

Fill the annular space between the carrier and casing pipe with material directed by the Engineer.

The casing pipe ends shall be completely sealed once the carrier pipe has been inserted. End sealer shall be a synthetic rubber with a minimum 1/8 inch thickness.
Jacking and Boring shall follow current INDOT Standard Specification, Section 716, except as modified above.

Backfilling shall be in accordance with the backfill requirements specified in this Section.

5.5.3 Method of Measurement: Bore and Jacked pipe shall be measured by the linear foot along the centerline of the pipe from end of casing pipe to end of casing pipe.

5.5.4 Basis of Payment: The accepted quantities of pipe shall be paid for at the contract unit price per linear foot.

5.6 Force Main

5.6.1 Description: For furnishing and installing complete and in place, all labor, materials, and equipment necessary for the construction of sewer force main of the respective sizes as described in the project specifications. The bid price shall include, but not be limited to, all costs for all pipe of the required sizes, joint materials, installation of pipe, backfill material, excavation and backfill, dewatering, removal and disposal or abandonment of force main, miscellaneous restoration, concrete thrust blocking or retaining glands as required or shown on the plans, sheeting, shoring, protection of existing structures, testing, cleanup and all other operations necessary to complete the work as shown on the plans or as specified, and shall include all applicable general items of Division B Section 5 and non-reimbursable items listed in Division A Section 12.3.

5.6.2 General Requirements: In general, the force main under this item shall be installed using the same procedures and workmanship as described for the "Water Main" in Division B Section 4: Water Main Construction of the current City of Elkhart Standard Construction Specifications.

Pipe materials for the force main shall be ductile iron pipe meeting the requirements of AWWA C 151, Class 52. Fittings shall be mechanical joint fittings with body thickness and radii of curvature conforming to ANSI Standard A21.10, and joints in accordance with Section 11-2.3 of ANSI Standard A21.11, Class 250 gray iron. No other pipe materials shall be allowed without the approval of the Engineer.

Backfilling shall be in accordance with the backfill requirements specified in this Section.

Locator hook-up points shall be installed along the force main at intervals not to exceed 500 feet. Locator hook-up points shall be installed and marked using markers manufactured by RhinoDome Test Station, Rhino TriView Test Station, or approved equal. Markers shall be colored green and marked "Warning Sewer Pipeline".

5.6.3 Method of Measurement: Force main shall be measured by the linear foot along the centerline of the pipe used. The beginning point for measurement at the lift station will be the outlet from the gate valve as shown on the plans, furnished with the lift station. The end point shall be the terminal manhole.

5.6.4 Basis of Payment: The accepted quantities of pipe shall be paid for at the contract unit price per linear foot. Fittings will be paid for at the contract unit price.

5.7 Horizontal Directional Drilling (HDD) Force Main Pipe

5.7.1 Description: For furnishing and installing complete and in place, all labor, materials and equipment necessary for the construction, by HDD method, of HDPE force main sewer pipe. The bid price shall include, but will not be limited to, all costs for pipe of the required sizes, joint materials, drilling fluid, tracer wire, backfill material, excavation and backfill, dewatering, removal and disposal or abandonment of existing sewer/water main, miscellaneous restoration, sheeting, shoring, protection of existing structures, testing, cleanup and all other operations necessary to complete the work as shown on the plans or as specified, and shall include all applicable general items of Division B Section 5 and non-reimbursable items listed in Division A Section 12.3.

5.7.2 General Requirements: HDD installation of force main pipe shall only be allowed at crossings as approved by the Engineer. HDD installation of pipe shall not be allowed without the approval of the Engineer.

Pipe installed via HDD method shall be High Density Polyethylene Pipe (HDPE). HDPE pipe shall be manufactured from materials conforming to ASTM D3350 with a minimum cell classification of PE345464C. The dimension ratio (DR) shall be no greater than DR11 and shall have a nominal ductile iron pipe size (DIPS) outer diameter (OD) unless otherwise specified. If the wall thickness must be increased to meet the stresses that will be applied to the pipe during the directional drilling process, then a pipe having a lower DR with an inside diameter equivalent to the pipe size specified shall be installed at no additional cost. HDPE pipe shall be manufactured to the requirements of ASTM F714.

HDPE fittings shall be in accordance with ASTM D3261.

HPDE Pipe shall be continuously marked with durable printing and include the following information: Nominal Size, Dimension Ratio, Pressure Class (psi), Manufacturer's Name and Product Series, Cell Class, ASTM Basis, "NSF-PW", Pipe Test Category, Plant Code & Extruder, Production Date, Operator Number (Shift Letter optional), Resin Supplier Code.

A minimum of three No. 10 gauge stranded copper tracer wires must be attached to the main at a maximum of 25 foot intervals and terminal station. The Contractor shall ensure that the tracer wire attached to the main is functional by performing a continuity test after the installation is complete. Locator hook-up points shall be installed along the tracer wire/force main at intervals not to exceed 500 feet in all unpaved areas, and as close as practical on either side of a waterway or pavement crossing. Locator hook-up points shall be installed and marked using markers manufactured by RhinoDome Test Station, Rhino TriView Test Station, or approved equal. Markers shall be colored green and marked "Warning Sewer Pipeline".

Sections of pipe and fittings shall be joined by the butt fusion process into continuous lengths at the job site. The joining method shall be the heat fusion method and shall be performed in strict accordance with the pipe manufacturer's recommendations and in accordance with ASTM F2620.

The directional drilling system shall be able to control the depth and direction of pipe within an accuracy window of +/- two inches. The system shall utilize a fluid-cutting process, using liquid clay such as bentonite. This clay shall be totally inert and contain no risk to the environment. The Contractor shall supply all water for drilling fluid and is responsible for proper disposal of all spoil material. Spoils are not to be discharged into sewers.

HDD shall follow current INDOT Standard Specification, Section 716, except as modified above.

Backfilling shall be in accordance with the backfill requirements specified in this Chapter.

5.7.3 Method of Measurement: HDD force main shall be measured by the linear foot along the centerline of the HPDE pipe used.

5.7.4 Basis of Payment: The accepted quantities of pipe shall be paid for at the contract unit price per linear foot.

5.8 Service Lateral Tee Connections - DIP, PVC, RCP, VCP

5.8.1 Description: For furnishing and installing complete and in place, all labor, materials and equipment necessary for the installation of sewer tees for sanitary sewer service connections. The bid price shall include, but will not be limited to, all costs for all tee sections of pipe material, installing the tee on the sewer main, joint

material, backfill material, excavation and backfill, removal and disposal of sewer pipe, miscellaneous restoration, sheeting, shoring, protection of existing structures, testing, cleanup and all other operations necessary to complete the work as shown on the plans or specified, and shall include all applicable general items of Division B Section 5 and non-reimbursable items listed in Division A Section 12.3.

5.8.2 General Requirements: Tees shall be installed such that the lateral will be at a 45 degree angle in the top half of the sewer main or within two feet of the invert of manholes. In manholes containing 30 inches or larger diameter sewers laterals shall be connected within one foot of the top of the pipe.

Tees shall be installed on all PVC and vitrified clay pipe. This may require the cutting and removing existing sewer main and use of water tight couplings approved by the Engineer.

Upon written approval of the Engineer, saddles or Kor-N-Tee connectors or approved equal may be used on reinforced concrete pipe. When saddles are approved, the sewer main shall be saw-cut so that the edges are smooth. Resilient connectors shall be in accordance with ASTM C923. The installation of precast concrete wye sections of pipe may be required.

PVC tee connections for laterals shall be manufactured to accept six inch PVC pipe and shall meet the requirements of ASTM D3034. The location of these "TEE" connectors will be determined by the Engineer in the field**.**

Existing laterals shall be checked and shall be clear of any obstructions.

Backfilling shall be in accordance with the backfill requirements specified in this Chapter.

5.8.3 Method of Measurement: Tee connections shall be measured by the unit. TEE connections shall be paid for at the contract unit price per each complete in place.

5.8.4 Basis of Payment: The accepted quantities of TEE connections shall be paid for at the contract unit price per unit.

5.9 Service Laterals and Cleanouts

5.9.1 Description: For furnishing and installing complete and in place, all labor, materials, and equipment necessary for the construction of PVC service laterals and cleanouts. The bid price shall include, but will not be limited to, all costs for all pipe, tees and bends, caps/covers, marker post, joint materials, installation of pipe, backfill material, excavation and backfill, dewatering, removal and disposal or abandonment of existing pipe, miscellaneous restoration, connection to existing pipe, sheeting, shoring, protection of existing structures, testing, cleanup and all other operations necessary to complete the work as shown on the plans or as specified, and shall

include all applicable general items of Division B Section 5 and non-reimbursable items listed in Division A Section 12.3.

5.9.2 General Requirements: Service laterals shall be PVC six inch SDR 35 pipe and shall conform to ASTM D3034 with bell and spigot joints. All PVC sewer joints in the Public Right-of-Way shall use elastomeric seals (gaskets) and be water tight and meet the requirements of ASTM D3212.

PVC fittings shall meet the requirements of ASTM D3034.

The pipe and fittings shall be homogeneous throughout and free from visible cracks, holes, foreign inclusions, or other injurious defects. The pipe shall be as uniform as commercially practical in color, opacity, density and other physical properties. Laterals installed for future connections shall be capped with a water-tight seal and marked with rebar.

Cleanouts shall be six inch PVC SDR 35 pipe. Cleanouts shall be adjusted to grade and capped. Cleanouts within a paved surface shall have cast iron frame covers, NF R-1976 or EJIW 1578or approved equal. A single cleanout shall be considered the cleanout tee at the service lateral, riser pipe, and cap/cover.

Installation of PVC pipe shall conform to ASTM D2321.

All sanitary sewer laterals shall have a two-inch “Y” for sewer cut or stamped into the curb. If curb is not available, it shall be cut or stamped into the sidewalk or edge of pavement. The sanitary sewer lateral shall be laid 90 degrees to the main in a location to be determined by the Engineer in the field. The exact locations of sanitary sewer laterals shall be determined in the field by the Engineer.

Sewer laterals stubs for future services shall be marked with a 4”x4” wood post and ¾” rebar, cut off at grade.

Backfilling shall be in accordance with the backfill requirements specified in this Chapter.

5.9.3 Method of Measurement: Service laterals shall be measured by the linear foot along the centerline of the pipe used, including all fittings. Cleanouts shall be measured by the unit.

5.9.4 Basis of Payment: The accepted quantities of service laterals shall be paid for at the contract unit price per linear foot.

The accepted quantities of cleanouts shall be paid for at the contract unit price per unit.

5.10 Manholes

5.10.1 Description: For furnishing and installing complete and in place, all labor, materials and equipment necessary for the construction of sanitary/storm/monitoring manholes. The bid price shall include, but shall not be limited to, all cost for precast manhole sections, adjustment rings, cast iron frames and covers, backfill material, excavation and backfill, dewatering, removal and disposal or abandonment of existing structures, final adjustment to grade, connection to existing sewers, miscellaneous restoration, sheeting, shoring, protection of existing structures, testing, cleanup and all other operations necessary to complete the work as shown on the plans or as specified, and shall include all applicable general items of Division B Section 5 and non-reimbursable items listed in Division A Section 12.3.

5.10.2 General Requirement: Manholes shall have a minimum 48 inch inside diameter, have a poured bottom finished in a professional manner to the desired shape and use high performance flexible connectors such as A-Lok, or approved equal, meeting ASTM C923 standard on all pipes entering or exiting the manhole.

The cast iron frames and covers shall be Neenah Foundry Company, Catalog No. R 1772with type B lid, East Jordan Iron Works, Catalog No. 1022-1 with HD lid or any approved equal and shall be installed to final grade and positioned out of the tire path of the street pavement. Sanitary manhole lids shall be solid shall have the letters “SANITARY” stamped into the lid. Storm manhole lids shall have the letters “STORM” stamped into the lid.

All taps into existing manholes shall be cored using high performance flexible connectors meeting ASTM C923 standards on all pipes entering the manhole.

5.10.3 Method of Measurement: Manholes, both new and reconstructed, shall be measured by the unit.

5.10.4 Basis of Payment: The accepted quantity of manholes shall be paid for at the contract unit price per each complete in place. All the cost for tapping existing manholes, final grade adjustments, and any cost for installing manholes not specifically mentioned above shall be merged into the cost of this bid item.

5.11 Catch Basins and Inlets

5.11.1 Description: For furnishing and installing complete and in place, all labor, materials and equipment necessary for the construction of storm catch basins and inlets. The bid price shall include, but will not be limited to, all cost for precast concrete sections, cast iron frames and covers, adjustment rings, sumps for catch basins, backfill material, excavation and backfill, dewatering, removal and disposal or abandonment of existing structures, final adjustment to grade, connection to existing sewers, miscellaneous restoration, sheeting, shoring, protection of existing structures, testing, cleanup and all other operations necessary to complete the work as shown on

the plans or as specified, and shall include all applicable general items of Division B Section 5 and non-reimbursable items listed in Division A Section 12.3.

5.11.2 General Requirements: Catch basins shall be constructed with a minimum two foot sump. Inlets shall have no sump.

The catch basins/inlets shall have a minimum 36 inch inside diameter, have a poured bottom finished in a professional manner to the desired shape and use high performance flexible connectors such as a Kor-N-Seal Boot, or approved equal, meeting ASTM C923 standard on all pipes entering or exiting the catch basin. Precast concrete structure sections shall meet the ASTM C478 specification.

The cast iron frames and grates shall be Neenah Foundry Company, Catalog No. R-3010 or approved equal. Frames should include the "Environmental Message"

5.11.3 Method of Measurement: Catch basins and inlets, both new and reconstructed, shall be measured by the unit.

5.11.4 Basis of Payment: The accepted quantity of catch basins and inlets shall be paid for at the contract unit price per each complete in place. The cost for tapping existing manholes, final grade adjustments, and any cost for installing structures not specifically mentioned above shall be merged into the cost of this bid item.

5.12 Epoxy Coated Structures

5.12.1 Description: For furnishing and installing complete and in place, all labor, materials and equipment necessary for the epoxy lining catch basins, inlets or manhole structures. The bid price shall include, but will not be limited to, all cost for cleaning and preparing all surfaces, applying epoxy coatings to all interior wall, pipe connection, and invert surfaces, curing and finishing, and all other operations necessary to complete the work as shown on the plans or as specified, Division B Section 5 and non-reimbursable items listed in Division A Section 12.3.

5.12.2 General Requirements: An epoxy spray or trowel-on mastic system shall be used to apply a waterproof epoxy coating.

A. Epoxy Spray System – shall be a two-component, 100% solids, formulated for spraying.

B. Epoxy trowel-on mastic system – shall be two-component, 100% solids, formulated for trowel-on applications.

The epoxy coating shall be formulated to prevent water exfiltration, and enhance water resistance, chemical resistance, bond strength, and internal strength. The system shall allow for up to ¼" build-up on vertical surfaces without sag, and to cure well in damp environments.

The epoxy coating shall be resistant to the following chemicals: bleach, detergent, gasoline, sodium chloride (20% solution), sodium hydroxide (20% solution), and sulfuric acid (10% solution).

The Contractor shall apply the epoxy material to all interior structure walls and invert surfaces to a uniform thickness of a minimum of 80 mils, unless the manufacturer recommendations require increased minimum thickness.

The Contractor shall submit the manufacturer's material descriptions, typical properties, and recommendations regarding surface preparation, mixing, handling, storage, applicator qualifications, application, curing, and quality control for the proposed epoxy system for the Engineer to review and approve in advance of the work.

5.12.3 Method of Measurement: Epoxy coated structures shall be measured by the unit for each structure designated to be coated.

5.12.4 Basis of Payment: The accepted quantity of epoxy coated structures shall be paid for at the contract unit price per each complete in place.

5.13 Lift Stations

5.12.1 Description: For furnishing and installing complete and in place, all labor, materials and equipment necessary to furnish a complete and ready for operation lift station. This shall include, but not be limited to, furnishing and installing a complete automatic underground lift station with all equipment, structures, interconnecting piping, electrical and appurtenances from the inlet sewer of the wet well to the outlet of the force main, as specified below and as shown on the plans. This shall also include all earth excavation and backfill, grading, sheeting, shoring, disposal of excess materials, dewatering, masonry, sewage pumps, wet well structure, valve vault and portable pump discharge vault, pipe, fittings and valves, controller and control systems, transducers, backup controls, testing, paved parking area and guard posts as shown on the plans, and shall include all applicable general items of Division B Section 5 and non-reimbursable items listed in Division A Section 12.3.

5.13.2 General Requirements:

5.12.2.1 Pumps
The Lift Station shall be equipped with two submersible raw sewage pumps as described in the plans and project specifications for each system.

The rated horsepower of the motors shall be not less than five hp for 460 volt, three phase power. All openings and passages shall be large enough to pass three inch diameter spheres and any stringy material or trash which may pass through a six inch house connection. Pumps shall have pump suction and discharge openings at least four inches in diameter.

Pump curves and RPM's shall be submitted to the Engineer for approval. Pumps shall be manufactured by Flygt, ABS, or other approved manufacturers.

PUMP DESIGN

The pump design shall be such that pumping units will be automatically connected to the discharge piping when lowered into place of the discharge connection. The pumps shall be easily removable for inspection or service requiring no bolts, nuts or other fastenings to be removed for this purpose, and no need for personnel to enter pump well. Each pump shall be fitted with a stainless steel chain, shackles and any accessory that is connected to the chain shall be made of a stainless steel of adequate strength and length to permit raising the pump for the inspection and removal.

The pumps and other electrical equipment, fixtures, and wiring in the lift station wet well must conform to the NEMA type 7 designation for explosion proof equipment. Intrinsic safety barriers shall be provided for the transducer and back up floats.

PUMP CONSTRUCTION

The stator casing, oil casing, and impeller shall be of grey iron construction, with all external parts coming into contact with sewage protected by a coat of rubber-asphalt paint. All external bolts and nuts shall be of stainless steel. A wear ring designed for abrasion resistance shall be installed at the inlet of the pump to provide protection against wear to the impeller. The impeller shall be of a double vane, non-clog design, capable of passing solids, fibrous material, heavy sludge and constructed with long throughway with no acute turns.

Each pump shall be provided with a tandem double mechanical seal running in an oil reservoir, composed of two separate lapped face seals. The lower consisting of one stationary tungsten-carbide ring and one rotating carbon ring, with each pair held in contact by separate spring. The seals shall require neither maintenance nor adjustment and shall be easily replaceable. Conventional double mechanical seals with a single or double spring between the rotating faces shall also be allowed.

A sliding guide bracket shall be separate from and bolted to the pump unit and the pump bracket shall have a machined connecting flange to connect with the cast iron discharge connection, which shall be bolted to the floor of the sump and so designed as to receive the pump connecting flange without the need of any bolts or nuts.

Sealing of the pumping unit to the discharge connection shall be accomplished by a single linear downward motion of the pump with the entire weight of the pumping unit guided by one or two guide bars or cables to and pressing tightly against the discharge connection; no portion of the pump shall bear directly on

the floor of the sump and no rotary motion of the pump shall be required for sealing. Sealing at the discharge connection by means of a diaphragm, O-ring, or similar method of sealing shall be accepted as an equal to a metal contact of the pump discharge and mating discharge connection. Guide bars shall be stainless steel.

Pump motor shall have Class F insulated windings which shall be moisture resistant. The motor shall be NEMA Design B rated 155 C maximum. Pump motors shall have cooling characteristics suitable to permit continuous operation, in a totally, partially or non-submerged condition. The pump shall be capable of running dry continuously in a totally dry condition. Cable junction box and motor shall be separated by a stator-lead sealing gland or terminal board which shall isolate motor from any water or solids gaining access through pump top. Pump motor cable shall be suitable for submersible pump applications and this shall be permanently embossed on the cable.

Pump motors shall include heat sensors in windings to stop pumps if overheating occurs. Also each pump shall have moisture sensors with appropriate relay to indicate seal failure.

PUMP WARRANTY

The pump manufacturer shall warrant the pumps being supplied to the City against defects in workmanship and materials for a period of five years under normal use, operation and service. In addition, the manufacturer shall replace certain parts which shall become defective through normal use and wear on a progressive schedule of cost for a period of five years; parts included are the mechanical seal, impeller, pump housing, wear ring and ball bearings. The warranty shall be in published form and apply to all similar units.

5.13.2.2 Wet Well Structures

The lift station shall have a wet well as hereinafter specified and as shown on the plans. All concrete for the wet well structures shall be 3,500 PSI concrete. The walls of the wet wells shall be constructed using reinforced concrete structure conforming to ASTM C-478. Each shall have cement asphaltic gaskets.

Furnish and install one aluminum access door, frame and hatch with a safety grate, complete with hinged and hasp equipped cover, upper guide holders, chain holder and cable holder in each pumping station. Frame shall be securely mounted above the pumps. The doors shall be torsion bar loaded and have safety locking handles in the open position. Doors shall have checkered plate. Hatches shall be manufactured by Nystrom, or equal as approved by the Engineer.

Furnish and install guide bars per the manufacturer's recommendations for each pump to permit rising and lowering pumps.

Intermediate guide rail supports shall be required for wet wells deeper than 12 feet. They shall also be required for each additional 10 feet. (e.g. 22 foot structure shall require two intermediates per bar)

For wet wells more than eight feet deep, a ladder shall be furnished and installed to facilitate maintenance.

Pump motor leads, transducer and float control wiring shall be terminated in an explosion-proof, moisture/waterproof enclosure outside of the wet well, preferably in the control panel for convenient access. Adequate strain relief connectors shall be used on motor leads and control wire extending into wet well.

No junction box shall be allowed in the wet well.

5.13.2.3 Valve Vault and Portable Pump Discharge Vault

Valve vaults and portable pump discharge vaults for the lift stations shall be standard five foot diameter manholes. Materials and installation of the manholes and the frames and cover shall conform to the requirements shown on the plans and the manhole specifications described. Piping shall at a minimum be two feet above vault bottom.

All access doors and hatches shall be aluminum. Doors shall be counterbalanced to require no more than 30 pounds of opening and equipped with an automatic locking hold arm. All hatches shall include a safety grate rated to withstand 300 psf loading and equipped with a hold open latch. Hatches shall be H20 series floor hatches as manufactured by Nystrom, or equal as approved by the Engineer.

5.13.2.4 Pipe, Fittings and Valves

All pipes shall be Class 52 Ductile Iron Pipe with flanged fittings except as shown otherwise on the plans. Fittings shall conform to the requirements set forth in the Force Main item.

Isolation valves shall be eccentric plug type valves. Plug valves shall be installed where called for on the plans and shall be as manufactured by DeZurik, Cla-Val Apco, Willamette, or other approved equal. Plug valves shall be flanged as called for on the plans.

Check valves shall be external swing arm type. Check valves shall be of the horizontally, swing type, designed to allow a full diameter passage with a minimum pressure loss. They shall be provided with a screwed or bolted cover for easy access. The check valve shall be located between the shutoff

valve and the pump and shall be rated for normal pressure and water hammer. Swing arm check valves shall be manufactured by DeZurik, Cla-Val, and Apco Willamette or approved equal.
The Contractor shall install the piping in the portable pump discharge vault as shown on the plans. The Contractor shall install a quick connect fitting on the end of the wye connection in the vault suitable for easy connection to a hose. The Contractor shall also provide and install a watertight cap to connect to the wye to seal the force main when the connection is not in use.

5.13.2.5 Ventilation

Proper ventilation shall be provided for all pump stations. No interconnection of ventilation systems shall exist between wet wells and dry wells. All intermittently operated ventilation equipment shall be electrically interconnected with the respective lift station lighting systems. All manual ventilation and lighting switches shall override any automatic controls. All fan wheels shall be fabricated from non-sparking materials.

Wet wells with screens or mechanical equipment shall be equipped with permanently installed mechanical ventilation in accordance with the following: Continuous ventilation that provides at least 12 complete air changes per hour, intermittent ventilation that provides at least 30 complete air changes per hour.

5.13.2.6 Control System

Furnish and install with each pump station one automatic control center in NEMA 4X stainless steel enclosures of sturdy, heavy gauge, all welded, sheet steel construction. The control center shall be Siemens Water Technologies or an approve equal.

The housing shall be mounted on a suitable power pedestal near the pump station with sufficient space for the telemetry system (48” x 62” x 18”) and shall have a double entry door with a 3-point latch. The housing shall be manufactured by Hoffman – two-door with 3-point latches, Type 4X model or approved equal. The inner door will contain all of the controls necessary for operation of the pumps and the outer door shall be able to be locked. The control center shall be designed to handle the incoming electrical service as shown on the plans, and shall be equipped with individual disconnect, across-the-line magnetic starters, overload protection in each phase, overload reset, hand-off automatic pump operation selector switch, pump running time meters, automatic transfer to non-operating pump in event of overload in operating pump, moisture sensor indicators, temperature sensor, lightning protection, surge protection, and terminal board with connection for high and low water level alarm. There shall also be a 110 GFI receptacle in the control panel. Unless specifically noted, the Contractor shall assume single phase power is not available and shall supply in the cabinet a sufficient transformer

to operate controls and power the GFI receptacle. There shall also be a condensation heater with a thermostat to keep the telemetry and other control cabinet components from freezing up. These are considered critical electrical spare parts and an extra set will be provided and delivered to the Wastewater Maintenance Department. Furnish and install a Siemens Water Technologies level transducer or an approved equal. The control center system shall provide for the automatic alternation of the sewage pumps and provision for the lag pump to start in the event that the inflow of raw sewage exceeds the capacity of the lead pump. A warning light shall be mounted on the control center and shall be so connected as to function when the high water or low water elevation in the wet well is reached. All electrical equipment shall be stocked by local suppliers. The control system shall be wired as shown on the wiring schematic enclosed at the end of the specifications or unless approval for an alternate schematic is given by the Engineer.

5.13.2.7 Controller

To control the levels in the wet well a level controller manufactured by Siemens Water Technology model LC150, SJE Rhombus model SP6R-LSC, or approved equal shall be provided as an integral part of the pump station control panel. The controller shall consist of a display/setpoint board and a submersible level transducer. The display/setpoint board shall be mounted on the face of the enclosure.

The controller shall provide a full-range differential control for two pumps plus high and low level alarm response to the signal received from the transducer. It shall operate on 120 VAC and include the motor starter pilot circuitry for operation of the pump. The high and low level alarms shall have an external fail safe dry contact for the remote alarm indication.

The level shall be visually observable on the 40 segment LED bar graph display on the face of the module. Level adjustments shall be made by moving pins in accordance with the bar graph to the desired level of control activation/deactivation. The programming pins shall allow for forty possible positions for setting the “on” level for each pump; the “off” level for each pump; the alarm “on” levels and the alarm “off” levels.

The controller shall provide automatic or manual operation of each pump based on a selector switch on the face of the module. In the automatic mode the pumps shall alternate lead-lag operation on each start cycle. In the manual mode either pump shall be able to be selected as the lead pump.

Four LED’s shall be provided above each set-point to indicate status for the respective condition. An alarm reset push button shall also be provided to silence an ongoing alarm.

A wet well level simulation switch shall be provided to allow the operator to simulate a rise or fall in wet well level. The simulation switch will turn on and off pumps/alarms based on the artificial level introduced by the operator. Upon release of the simulation switch, the level shall return to the actual reading received from the transducer.

It is specific intention of this functional requirement that a standard controller will be employed with features as herein described and that it be a fully-integrated assembly. That is, the furnishing of similar functions using a generic programmable controller with custom software, a multiplicity of set-point modules or extensive relay/timer logic to accomplish control sequences, etc., is specifically precluded by this specification and will not be acceptable.

The controller furnished under this specification shall be comprehensively integrated with the specified submersible level transducer type wet well level sensing system and associated motor control equipment and circuitry. It shall be a model LC 150 as manufactured by Siemens Water Technologies, model SP6R-LSC as manufactured by SJE Rhombus, or approved equal. It shall be furnished with all necessary drawings and instructions and placed in successful automatic operation. It shall be guaranteed for one year from date of startup and acceptance to the effect that any defects in material or workmanship shall be corrected without cost of obligation to the City.

5.13.2.8 Flowmeter

All Lift Stations shall be equipped with a Siemens Electromagnetic flowmeter. The flowmeter shall include a sensor and transmitter. The sensor shall be model Sitrans F M Mag 3100 and transmitter model Sitrans F M Mag 500.

5.13.2.9 Transducer

The liquid level transducer shall be a 4-20 MADC, w-wire, 15-40 VDC loop-powered type with its output signal directly proportional to the measured level excursion over a factory-calibrated range of 0 to 10 feet of water. It shall be Siemens Water Technologies model A-1000 when used with Siemens Water Technologies equipment, PTX/PMP 1290 series as manufactured by General Electric when used with SJE Rhombus equipment, or approved equal.

The transducer shall be of the solid state head-pressure sensing type, suitable for continuous submergence and operation and shall be installed in accordance with manufacturer's instructions. The bottom diaphragm face of the sensor shall be installed 12 inches above the floor of the wet well. The sensor shall be mounted using a one inch vertical stainless steel pipe and cable system at the location shown on the drawings.

The transducer housing shall be fabricated of type 316 stainless steel with a bottom diaphragm 2 5/8 inch diameter of heavy-duty, limp, foul-free, molded Teflon bonded to a synthetic rubber back/seal. A hydraulic fill liquid behind the diaphragm shall transmit the sensed pressure to a solid state variable capacitance transducer element to convert the sensed pressure to a corresponding electrical value

The sensed media shall exert its pressure against the diaphragm that flexes minutely so as to vary the proximity between an internal ceramic diaphragm and a ceramic substance to vary the capacitance of an electrical field created between the two surfaces. A stable, hybrid, operational amplifier assembly shall be incorporated in the transducer excite and demodulate the sensing mechanism. The transducer shall incorporate laser-trimmed, temperature compensation and high quality components and construction to provide a precise, reliable, stable output signal directly proportional to the sensed pressure over a factory calibrated range.

The transducer element shall incorporate high over-pressure protection and be designed to withstand intermittent over-pressures five times the full scale range being sensed. Metallic diaphragms shall not be acceptable in that they are subject to damage or distortion.

Sensing principles employing LVDT's, resistive or pneumatic shall not be acceptable.

The transducer shall include easily accessible offset and span adjustments in the upper assembly. Span shall be adjustable down 15 percent of the sensor range. Fine and coarse adjustments for both span and offset shall be provided, using 25-turn potentiometers. Offset and span adjustments shall be non-interactive, for ease of calibration.

The internal pressure of the lower transducer assembly shall be relieved to atmospheric pressure through a heavy duty urethane jacketed hose/cable assembly and a slack PVC bellows mounted in the NEMA 3R enclosure.

The sealed breather system shall compensate for variations in barometric pressure and expansion and contraction of air due to temperature changes and altitude as well as prevent fouling from moisture and other corrosive elements.

The transducer shall be provided with a cable suspension kit to reduce strain on the electrical cable.

The transducer shall be secured to the side of the wet well structure in six inch PVC with stainless steel brackets.

5.13.2.10 Redundant Pump Control (Backup Control)

A redundant back-up control system shall be provided. The back-up control shall run one pump while simultaneously indicate "high water alarm". The controller shall keep the station operational until the normal control system can be returned to proper operation.

The backup system shall activate only when high wet well level trips the high level float. This switch shall be set at an elevation above the normal operating range of the station to insure the switch is kept out of debris. The high level switch shall be a Siemens Water Technologies model B100 LSA-X, or approved equal.

The controller shall be wired in such a manner as to achieve the above described redundant control alarm feature.

The controller shall be a Siemens Water Technology model CB1T, or approved equal. The Siemens Water Technologies LC150 and the A1000 transducer shall be used or an approved equal. If the Contractor chooses a different type, this must be submitted in writing to the maintenance supervisor of the Wastewater Maintenance Department. This will be reviewed, and if approved, an initialized copy will be sent back to the Contractor.

All control wires shall be tagged with permanent plastic at each termination.

5.13.2.11 Electrical Work

All electrical work shall conform to applicable provisions of the local and National Electrical Codes.

The Contractor shall provide and install the electrical service entrance including the underground service and meter socket, and shall mount the control system enclosure on the power pedestal. The Contractor shall run the necessary conductors and conduit underground to connect the motors to the control system enclosure. The Contractor shall provide a backup power supply connection compatible with City equipment (See the Maintenance Supervisor of the Wastewater Maintenance Department).

The Contractor shall be responsible for providing electricity for the lift station until the City accepts the installation.

All electrical components shall be protected against corrosive conditions and each flexible cable shall be provided with a watertight seal and separate strain relief.

5.13.2.12 Telemetry Unit

A telemetry unit shall be part of the control and monitoring system. The lift station telemetry unit shall be manufactured by Motorola, and be a ACE 3600 or approved equal as described in the project plans and specifications, including a Yagi style antenna with sufficient height to transmit and receive signals to and from the City's central repeater tower. All equipment must be approved by the Engineer. The Contractor shall furnish, and provide installation of the telemetry unit in accordance with the City and the manufacturer's requirements, and shall provide written verification of telemetry unit's performance optimization.

5.13.2.13 Chemical Treatment Injection System

When required, the pump station shall be equipped with a chemical treatment injection system, such as Chlorine, Hydrogen Peroxide, Bioxide or other approved chemical, capable of preventing sulfide formation in the force main. The system shall be computer automated with a dosage that is adjustable to maintain a hydrogen sulfide level of less than five ppm at the discharge point of the force main.

5.13.2.14 Shop Drawings

The Contractor shall supply the Engineer with three copies of detailed shop drawings of the lift station for approval prior to ordering. Prior to start-up of the lift station, the Contractor shall supply the Engineer with three copies of an operating and maintenance manual for the lift station which shall include a list of all parts, components, appurtenances and "As-Built" drawings of the installation. Following start up, the Contractor shall supply the Engineer two copies of the start-up report.

5.13.2.15 Start-up Testing

The Contractor shall coordinate a start-up test with the City of Elkhart personal. The start-up test shall including operation of lift station functions running on AEP service power and also operation on generator power. The start-up test shall include operation of the pumps, controls, telemetry, flowmeter, transducer, chemical treatment/injection and all other applicable mechanical and electrical equipment to ensure everything is operating correctly.

5.13.3 Method of Measurement: Lift stations shall be measured by the unit.

5.13.4 Basis of Payment: All the cost for installing lift stations and any cost not specifically mentioned above shall be merged into the cost of this bid item.

5.14 External Drop Connection

5.14.1 Description: For furnishing and installing complete and in place, all labor, materials, and equipment necessary for the construction of a PVC external drop connection. The bid price shall include, but will not be limited to, all costs for all pipe of the required sizes, joint materials, installation of pipe, coring of existing manhole, water proof boot, tees, bends, caps/castings, concrete/flowable fill, excavation and backfill material, dewatering, miscellaneous restoration, sheeting, shoring, protection of existing structures, testing, cleanup and all other operations necessary to complete the work as shown on the plans or as specified.

5.14.2 General Requirements: PVC pipe shall conform to Division B, Section 5.1 of the Elkhart Standard Specifications.

All taps shall be cored using high performance flexible connectors meeting ASTM C923 standards.

5.14.3 Methods of Measurement: External Drop Connections shall be measured by the unit. External Drop Connection shall be paid for at the contract unit price per each complete in place.

5.14.4 Basis of Payment: The accepted quantity of External Drop Connections shall be paid for at the contract unit price per each complete in place.

6. PAVEMENT

In addition to the Non-Reimbursable Items, Division A Section 12.3, the following general items apply to all pavement pay items. These items are non-reimbursable and included in the cost of work.

General Items

In general, new pavement shall have a cross-section that conforms to the following:

Table 6.1
Pavement Cross-Section

Pavement Type	PCC Cross-Section	HMA Cross-Section
Residential Roadway	6” PCC	1.5” Surface; 2” Binder; 4” Base
Commercial/Industrial Roadway	9” PCC	1.5” Surface; 3” Binder; 7” Base
Drive Approach	Match Roadway	Match Roadway
Sidewalk thru Drive Approach	Match Roadway	N/A
Sidewalk	4” PCC	N/A
Multi-use Pathway	N/A	2” Surface; 2” Base

Pavement shall be crowned at 2% unless otherwise specified.

Adjustment of Structures in Pavement:
All existing castings/structures in the pavement shall be adjusted to the final pavement grade.

Pavement Sub-base:
This shall apply to all pavements. The sub-base shall be prepared sufficiently for pavement placement. The sub-base shall be graded as required to meet the final pavement grades. For undisturbed sub-bases, the first six inches below the sub-base shall be compacted to 100 percent of the maximum dry density and be tested in accordance with Division B Section 10.3. For embankment sub-base or sub-base that has been disturbed by trenching or excavating the compaction requirements and depth shall be as outlined in Division B Section 10.3. The compacted sub-base shall be extended as least two feet beyond the edges of the proposed pavement, including curb/gutter, prior to placing base or pavement.

During sub-base preparation and after its completion, adequate drainage shall be provided at all times to prevent standing water.

The sub-base shall be finished and maintained in a smooth and compacted state until the base layer or pavement layer is placed. No hauling shall be done or equipment moved over the prepared sub-base, unless the subgrade is protected with adequate plank runways, mats or other satisfactory means. If ruts occur they shall be filled and compacted as approved by the Engineer.

Proof-rolling of the sub-base surface shall be performed with a pneumatic tire roller or fully loaded tri-axle dump truck. Roller marks, irregularities, or failures shall be brought to the Engineer's attention for corrective action if necessary.

Unless otherwise noted in the project specifications, preparation, grading, compaction, and testing of the pavement sub-base shall be merged with the cost of the applicable pavement pay item.

Intersections with curb ramps and cross walk shall meet ADA PROWAG requirements. The crosswalks shall have a maximum cross slop of 2% and a maximum transverse slope of 5% or no more than the slope of the road, whichever is greater.

Vandalism:
The Contractor shall be responsible for protecting all fresh concrete, including but not limited to drives, sidewalk, curb/gutter, and roadway, from vandalism until it has set sufficiently to prevent defacement. The Contractor shall be responsible for all repair and/or replacement of vandalized concrete at locations and methods as deemed appropriate by the Engineer. The Contractor shall receive no direct payment for providing protection or replacements/repairs.

6.1 Aggregate Base

6.1.1 Description: For furnishing and installing complete and in place, all labor, materials and equipment necessary for the construction of aggregate base. The bid price shall include, but not be limited to, all costs for all material, excavation, compaction, grading, testing, and all clean-up necessary to complete the work as shown on the plans or as specified, and shall include all applicable general items of Division B Section 6 and non-reimbursable items listed in Division A Section 12.3.

6.1.2 General Requirements:

6.1.2.1 Material
The aggregate base shall be composed of No. 53 aggregate. The aggregate shall be in compliance with INDOT Standard Specification Sections 301 and 904 for course aggregate Class D, Dense Graded, No. 53 size. The aggregate shall consist of limestone, dolomomite, gravels, standstone or other geologic rock type approved by the Engineer. Crushed concrete shall be an acceptable as approved by the Engineer, only if the Contractor can demonstrate reasonable conformance to No. 53 gradation and consistency in gradation and uniform construction throughout the project.

6.1.2.2 Placement
The aggregate shall be placed on compacted sub-base. It shall be spread in uniform lifts with a spreading and leveling device capable of placing aggregate to the depth, width, and slope specified. The aggregate shall be placed in lifts of a minimum of three inches. and a maximum of six inches.

The aggregate shall be handled and transported to minimize segregation and loss of moisture.

The aggregate base shall be placed to extend at least two feet beyond the edges of proposed pavement.

6.1.2.3 Compaction
Aggregates shall be compacted to 100 percent of the maximum dry density and tested in accordance with Division B Section 10.3.

6.1.3 Method of Measurement: The aggregate base shall be measured by the square yard for the specified thickness.

6.1.4 Basis of Payment: The accepted quantities of aggregate base shall be paid for at the contract unit price per square yard.

6.2 Hot Mix Asphalt Pavement

6.2.1 Description: For furnishing and installing complete and in place, all labor, materials and equipment necessary for the construction of hot mix asphalt pavement (HMA) base, intermediate, surface mixtures or other miscellaneous applications. The bid price shall include, but not be limited to, all costs for all excavating, backfill, grading, compaction, material, tack, testing, and all clean-up necessary to complete the work as shown on the plans or as specified, and shall include all applicable general items of Division B Section 6 and non-reimbursable items listed in Division A Section 12.3.

6.2.2 General Requirements:

HMA materials and construction shall be in conformance with INDOT Standard Specifications (INDOT SS) Section 400 unless otherwise modified herein. All references are to the 2010 INDOT SS.

6.2.2.1 Quality Control
The HMA shall be supplied from a certified HMA plant in accordance with INDOT ITM 583; Certified Hot Mix Asphalt Producer Program. The HMA shall be transported and placed according to a Quality Control Plan (QCP) prepared by the Contractor in accordance with INDOT ITM 803; Contractor Quality Control Plans for Hot Mix Asphalt Pavements. The QCP shall be submitted, upon request, to the Engineer. Failure to request the QCP shall not relieve the Contractor of responsibility for Quality Control.

6.2.2.2 Material
Materials shall be in accordance with the following, except that Course Aggregate for the asphalt shall be crushed limestone:

Asphalt Materials	
PG Binder	INDOT SS 902.01 (a)
Course Aggregate	INDOT SS 904
Base Mixtures, - Class D or Higher	
Intermediate Mixtures – Class C or Higher	
Surface Mixtures – Class B or Higher	
Fine Aggregate	INDOT SS 904
Tack Materials	
Asphalt Emulsion, AE-T, AE-PMT, SS-1h	INDOT SS 902.01 (b)
PG Asphalt Binder, PG 64-22	I NDOT SS 902.01 (a)

6.2.2.3 Job Mix Formula

A job mix formula (JMF) shall be prepared for the specified asphalt types to be used on the project in accordance with the Volumetric Mix Design Section INDOT SS 401.05. INDOT references to design mix formula (DMF) shall be removed and replaced with JMF. References to mixture adjustment factor (MAF) are not applicable. All asphalt shall be dense graded mixtures.

The DMF shall be submitted to the City for approval sufficiently in advance of work. The DMF will be based on the application and mixture designation as follows:

Table 6.2
Mixture Type

Mixture Type	Type A	Type B	Type C
Application	Local Streets Residential Approaches Multi-use Pathways Alleys	Collector Streets	Arterial Streets Truck Routes Commercial Approaches Industrial Approaches
Surface	9.5 mm	9.5 mm	9.5 mm
	12.5 mm	12.5 mm	12.5 mm
Surface – PG Binder	64-22	64-22	70-22
Intermediate	12.5 mm	12.5 mm	12.5 mm
	19.0 mm	19.0 mm	19.0 mm
Intermediate – PG Binder	64-22	64-22	64-22

Base	19.0 mm	19.0 mm	19.0 mm
	25.0 mm	25.0 mm	25.0 mm
Base – PG Binder	64-22	64-22	64-22

6.2.2.4 Recycled Materials
Recycled materials, if used, shall be in accordance with INDOT SS 402.080.

6.2.2.5 Acceptance of Mixtures
Acceptance of mixtures shall be on the basis of a Type D certification in accordance with INDOT SS 916(d). The test results shown on the certification shall be the quality control tests representing the material supplied and include air voids and binder content.

6.2.2.6 Construction Requirements
Equipment for HMA operations shall be in accordance with INDOT SS 409 with modifications indicated in INDOT SS 401.10.

Fuel oil, kerosene, or solvents shall not be transported in open containers on any equipment at any time. Cleaning of equipment and tools shall not be accomplished on the pavement or paved shoulder area.

The Contractor shall conduct work operations to prevent the segregation of mix (e.g. by proper truck loading 'triple dump' method, etc.). Segregated mix that is discovered in place shall be removed and replaced by the Contractor as directed at no cost to the City. All bituminous mix trucks, without exception, shall tarp the loads until dumping, and shall re-tarp for a partial load. The Contractor shall be responsible for safe driving by haul trucks (as well as all equipment in general).

All mixtures that become loose and broken, mixed with dirt, or in any way defective shall be removed and replaced.

The Contractor shall be responsible for the coordinating with all utilities, etc. on the correct elevation of all manholes, valves, castings, etc. within pavement. The Contractor shall be responsible for all pavement corrections prior to final acceptance of the work.

6.2.2.7 Preparation of Surfaces to be Overlaid
PCCP, milled asphalt surfaces, and asphalt surfaces shall be tacked. Contact surfaces of curbing, gutters, manholes, and other structures shall be tacked. Base and intermediate layers shall be tacked prior to paving the consecutive layer.

6.2.2.8 Weather Limitations

HMA courses equal to or greater than one inch, but less than two inches are to be placed when the ambient and surface temperatures are 45°F or above. HMA courses equal to or greater than two inches are to be placed when the ambient and surface temperatures 33°F or above. Mixtures shall not be placed on frozen subgrade.

6.2.2.9 Spreading and Finishing

Spreading and Finishing shall be as indicated in INDOT SS 402.13. The temperature of each mixture at the time of spreading shall not be less than 273°F for dense graded mixtures. The Engineer shall approve each lift prior to placing of the next lift. The Engineer's acceptance of each lift will be determined based upon, but not limited to, pavement smoothness, etc. Rejected lifts shall be replaced at no extra cost to the City.

6.2.210 Joints

Joints shall be as indicated in INDOT SS 402.14. Longitudinal joints in the surface shall be at the lane lines of the pavement. Longitudinal joints below the surface shall be offset from previously constructed joints by approximately 6 in., and be located within 12 in. of the lane line. Transverse joints shall be constructed by exposing a near vertical full depth face of the previous course. If constructed under traffic, temporary transverse joints shall be feathered to provide a smooth transition to the driving surface.

6.2.2.11 Compaction

Compaction shall be as indicated in INDOT SS 402.15.

6.2.2.12 Pavement Smoothness

If the smoothness of new HMA is in question, the Engineer shall require the Contractor to test the smoothness in accordance with INDOT SS 401.18 at no extra cost to the City. Tests shall be conducted using a 16 ft and 10 ft long straightedge. Profilograph testing shall not be required. Results of the test shall be submitted to the Engineer, in writing, within 24 hours of the test. The new pavement shall be required to meet the tolerations outlined in INDOT SS 401.18, and the Contractor shall take corrective action if necessary to meet those tolerations at no extra cost to the City. Payment of the surface layer of HMA shall be withheld until all tolerances are met.

6.2.2.13 Drive Approaches

HMA approaches shall match the roadway cross-section, within the Public Right-of-Way. Longitudinal slopes on approaches shall be no greater than 10%. Removal of existing drive approaches shall be included in the cost for new drive approaches.

6.2.2.14 Testing

The Contractor shall perform HMA testing in accordance with Section 10.4.

6.2.3 Method of Measurement: The HMA pavement shall be measured by the square yard for the specified thickness and verified with weight tickets.

6.2.4 Basis of Payment: The accepted quantities of HMA pavement shall be paid for at the contract unit price per square yard.

6.3 Portland Cement Concrete Pavement

6.3.1 Description: For furnishing and installing complete and in place, all labor, materials and equipment necessary for the construction of Portland cement concrete (PCC) pavement. The bid price shall include, but not be limited to, all costs for all excavating, backfill, grading, compaction, material, forming, finishing, joints (longitudinal and transverse), joint materials, dowel bars, lane ties, saw-cutting, brooming, tining, curing, sealing, testing, and all clean-up necessary to complete the work as shown on the plans or as specified, and shall include all applicable general items of Division B Section 6 and non-reimbursable items listed in Division A Section 12.3.

6.3.2 General Requirements:

Concrete materials and construction shall be in conformance with INDOT Standard Specifications Sections 501, 502, 503, 504, and 508 unless otherwise modified herein.

6.3.2.1 Material
Course Aggregate for the concrete shall be crushed limestone. Local gravel and recycled concrete will not be allowed.

6.3.2.2 Mix Design
The concrete shall have a minimum six bags of cement per cubic yard of concrete; the concrete shall have five gallons of water per sack of cement and shall be capable of reaching 4,000 psi in 28 days as verified by the Contractor's testing of cylinders or flexural beams from each individual pour (a minimum of three samples per hour). The Contractor shall provide job mix formula information including admixtures to the City for approval sufficiently in advance of the Work.

6.3.2.3 Mixing and Transporting
Concrete mixing and transportation shall be completed transit mix methods. Discharge from a truck agitator or truck mixer shall be completed within 90 minutes of mixing the water, cement, and aggregates. Concrete shall be uniformly mixed when delivered to the job site. Batch tickets for each load of concrete shall indicate the weight of cement and aggregates, volume of water, and the type and amount of any approved admixtures. When concrete is delivered in transit mixers, additional water to increase the workability of the load may be added within 45 minutes of the initial mixing only as approved in

each case by the City. Following any and all adding of water at the site, the concrete shall be thoroughly mixed and tested for slump before being placed. Any addition of water shall be noted on the batch ticket and shall not occur as a continuing operation. Concrete with water added after leaving the plant must have a slump of less than or equal to 4.0 inches. Concrete exceeding 4.0 inches slump or 90 minutes of mix time shall not be used for pavement and shall be rejected without pay.

6.3.2.4 Temperature Limitations

PCC pavement shall not be placed on frozen subgrade or when the ambient temperature is below 37°F. Insulation shall be provided, at no extra cost to the City, when the ambient temperature will be below 37°F. Mixed concrete shall not have a temperature above 90°F before placing. Concrete which arrives to site with a temperature above 90°F shall be rejected without pay.

6.3.2.5 Forms

The forms shall be set true to line and grade and shall be approved by the Engineer. Slip form method may also be used.

6.3.2.6 Subgrade Preparation

The subgrade shall be compacted and brought to the appropriate grade. The subgrade and forms shall be sprayed with water prior to placing PCC pavement.

6.3.2.7 Finishing

The concrete pavement shall be finished with a roller tube finisher. Transverse grooves with a uniform depth shall be placed across the surface using mechanical equipment or rakes with spring steel tines. The Contractor shall be responsible for correcting any surface smoothness defects as deemed necessary by the Engineer at the Contractor's expense. The Contractor shall take all necessary steps to avoid vandalism of the work, including the timing of pours, providing of a night watchman, etc. There will be no direct payment for this work. The Contractor shall be responsible for repair and/or replacement of cracked or vandalized pavement at locations and by methods as deemed appropriate by the Engineer.

6.3.2.8 Curing

Immediately upon completion of the finishing the pavement shall be cured by the use of a white membrane forming material.

6.3.2.9 Joints

Transverse joint spacing shall be a maximum of 18 feet. Longitudinal joints shall be placed along centerline and lane lines. Transverse and longitudinal joint construction shall be performed in accordance with current INDOT Standard Drawings E 503-CCPJ-01 thru E 503-CCPJ-08

6.3.2.10 Crack and Joint Sealing
Only single component low modulus silicone sealants which are self-leveling will be accepted.

6.3.2.11 Drive Approaches
Concrete approaches shall match the roadway cross-section, within the Public Right-of-Way. Longitudinal slopes on approaches shall be no greater than10. Removal of existing drive approaches shall be included in the cost for new drive approaches.

6.3.2.12 Testing
The Contractor shall perform pavement testing in accordance with Section 10.5.

6.3.3 Method of Measurement: The PCC pavement shall be measured by the square yard for the specified thickness.

6.3.4 Basis of Payment: The accepted quantities of PCC pavement shall be paid for at the contract unit price per square yard.

6.4 ADA Sidewalks, Landings and Ramps

6.4.1 Description: For furnishing and installing, complete and in place, ADA compliant sidewalk, landings and ramps. All sidewalks, landings, crosswalks and ramps shall comply with the Proposed Accessibility Guidelines for Pedestrian Facilities in the Public Right-of-Way (otherwise known as "PROWAG") July 26, 2011 or most current version. The bid price shall include, but not be limited to, all costs for labor, materials, tools, equipment, excavation, compaction, joints and joint material, truncated domes, finishing, curing and clean-up necessary to complete the work as shown on the plans or as specified, and shall include all applicable general items of Division B Section 6 and non-reimbursable items listed in Division A Section 12.3.

6.4.2 General Requirements:

6.4.2.1 Grades
All sidewalk, landings, crosswalks, and ramps shall be constructed to meet current ADA PROWAG compliance standards. Under no circumstance shall non-compliant sidewalk, landings crosswalks or ramps be accepted by the Engineer. According to PROWAG, the continuous width of sidewalks shall be 48" minimum, exclusive of the width of the curb (R302.3), with a 60" x 60" passing space every 200' (R302.4).

Landing slopes shall not exceed 2% in any direction, and are required at the top and bottom of each ramp run, and shall be at least as wide as the widest

ramp run leading to the landing. Landing clear lengths shall be five feet minimum. Longitudinal slopes on sidewalk shall not exceed 5% or the slope of the adjacent roadway, whichever is greater. Longitudinal slopes on crosswalks shall not exceed 5%.

Longitudinal slope on landings shall not exceed 2%.

Longitudinal slope on ramps shall not exceed 8.3% for a distance of 15 feet between the landing and roadway.

Newly constructed roadway intersections shall be graded such that the sidewalk ramps and crosswalks will not exceed 2% transverse slope at the roadway intersection.

Sidewalk and ramps shall be flush with adjacent sidewalk/curb/ gutter/roadway. Lips in excess of ¼ inches or beveled lips greater than ½ inches beveled shall not be accepted.

6.4.2.2 Material

Course Aggregate for the concrete shall be crushed limestone. Local gravel and recycled concrete will not be allowed.

6.4.2.3 Mix Design

The concrete shall have a minimum six bags of cement per cubic yard of concrete; the concrete shall have five gallons of water per sack of cement and shall be capable of reaching 4,000 psi in 28 days as verified by the Contractor's testing of cylinders or flexural beams from each individual pour (a minimum of three samples per hour). The Contractor shall provide job mix formula information including admixtures to the City for approval sufficiently in advance of the work.

6.4.2.4 Temperature Limitations

Sidewalk shall not be placed on frozen subgrade or when the ambient temperature is below 37°F. Insulation shall be provided, at no extra cost to the City, when the ambient temperature will be below 37°F. Mixed concrete shall not have a temperature above 90°F before placing. Concrete which arrives to site with a temperature above 90°F shall be rejected without pay.

6.4.2.5 Forms

The forms shall be set true to line and grade. Forms may be checked by the Engineer, but approval of forms does not constitute approval of ADA compliance.

Sidewalk paving machines may be used provided the sidewalk can be constructed to the requirements of the specifications.

6.4.2.6 Subgrade Preparation

The subgrade shall be compacted and brought to the appropriate grade. The subgrade and forms shall be sprayed with water prior to placing PCC pavement.

6.4.2.7 Joints

Expansion joints, formed by using a piece of preformed joint material 1/2 inch thick, and to the size and shape of the sidewalk shall be place against existing sidewalk before pouring and at every 100 linear foot interval. All joints are to be edged and finished to present a neat appearance.

6.4.2.8 Finishing

The concrete sidewalk shall be finished with a float. After finishing, the sidewalk shall be lightly brushed.

6.4.2.9 Curing

Immediately upon completion of the finishing the concrete sidewalk shall be cured by the use of a white membrane forming material.

6.4.2.10 Drive Approaches

Concrete sidewalk shall extend through drive approaches. Driveway and drive approaches shall be a separate pour from sidewalk. Adjustment to drive approach grades shall take into account the ADA sidewalk cross-slope. The sidewalk through a driveway shall maintain the maximum 2% cross slope and 5% transverse slope.

6.4.2.11 Truncated Domes

Truncated domes shall be a cast-in-place, detectable warning plate. The material shall be cast iron or polymer composite. The plates shall be 24 inches deep and stretch the entire width of the ramp that is flush to the street. They shall be contrasting in color with the surrounding ramp, preferably brick red, or as approved by the Engineer. The plates shall be obtained from an INDOT approved manufacturer per INDOT specification 905.5. They shall be placed in accordance with Section 305 of the PROWAG current specifications and shall be installed per the manufacturer's recommendations.

6.4.2.12 Testing

The Contractor shall perform concrete pavement testing in accordance with Division B Section 10.5. All finished sidewalk, ramps, and landings shall have no significant gaps and will be checked with a four foot smart level for compliance with ADA requirements. Failure to meet grade tolerances at any point will result in failure of the entire slab.

6.4.3 Method of Measurement: ADA Landings are included in and considered ADA sidewalk. ADA sidewalk and ADA ramps shall be measured by the square foot for the specified thickness. ADA compliance for crosswalks shall be included in the pavement bid item. No sidewalk or ramps shall be paid for until all sidewalk and ramps are in compliance with ADA standards.

6.4.4 Basis of Payment: The accepted quantities of ADA Sidewalk and ADA Ramp shall be paid for at the contract unit price per square foot.

6.5 Concrete Curb/Gutter

6.5.1 Description: For the construction of new concrete curb and/or concrete curb and gutter. The bid price shall include, but not be limited to, all costs for labor, materials, tools, equipment, excavation, backfill, compaction, joints and joint material, finishing, curing and clean-up necessary to complete the work as shown on the plans or as specified, and shall include all applicable general items of Division B Section 6 and non-reimbursable items listed in Division A Section 12.3.

6.5.2 General Requirements:

6.5.2.1 Material
Course Aggregate for the concrete shall be crushed limestone. Local gravel and recycled concrete will not be allowed.

6.5.2.2 Mix Design
The concrete shall have a minimum six bags of cement per cubic yard of concrete; the concrete shall have five gallons of water per sack of cement and shall be capable of reaching 4,000 psi in 28 days as verified by the Contractor's testing of cylinders or flexural beams from each individual pour (a minimum of three samples per hour). The Contractor shall provide job mix formula information including admixtures to the City for approval sufficiently in advance of the work.

6.5.2.3 Temperature Limitations
Curb and Gutter shall not be placed on frozen subgrade or when the ambient temperature is below 37°F. Insulation shall be provided, at no extra cost to the City, when the ambient temperature will be below 37°F. Mixed concrete shall not have a temperature above 90°F before placing. Concrete which arrives to site with a temperature above 90°F shall be rejected without pay.

6.5.2.4 Forms
The forms shall be set true to line and grade. Curb machines may be used provided the curb can be constructed to the requirements of the specifications.

6.5.2.5 Subgrade Preparation

The subgrade shall be compacted and brought to the appropriate grade. The subgrade and forms shall be sprayed with water prior to placing concrete.

6.5.2.6 Joints

Butt joints, formed by using a piece of preformed joint material ½ inch thick, but to the size and shape of the curb, shall be placed against existing curb before pouring. All joints are to be edged and finished to present a neat appearance.

6.5.2.7 Finishing

The concrete curb shall be finished by steel trowels shaped such as to conform to the appearance as shown on the plans. After finishing by steel trowels, the curb shall be lightly brushed.

6.5.2.8 Curing

Immediately upon completion of the finishing the concrete shall be cured by the use of a white membrane forming material.

6.5.2.9 Testing

The Contractor shall perform concrete testing in accordance with Division B Section 10.5.

6.5.2.10 ADA

The curb shall be dubbed down at the curb ramps and shall meet ADA requirements. All work to meet ADA requirements shall be incidental to the line item.

Curb transitions at drive approaches shall be dubbed down to a standard two feet.

6.5.3 Method of Measurement: Concrete Curb and/or Concrete Curb and Gutter shall be measured by the lineal foot along the front face of curb at finished grade elevation.

6.5.4 Basis of Payment: The accepted quantities of Concrete Curb and/or Concrete Curb and Gutter shall be paid for at the contract unit price per foot for the type and thickness specified complete in place.

7. MISCELLANEOUS CONSTRUCTION

Applicable Non-Reimbursable Items, Division A, Section 12.3, apply to all of the following Miscellaneous Construction pay items.

7.1 Shoulder Drains

7.1.1 Description: For furnishing and installing complete and in place, all labor, materials and equipment necessary for the construction of shoulder drains, swales, roadside ditches. The bid price shall include, but not be limited to, all costs for all excavation, backfill, grading and cleanup necessary to complete the work as shown on the plans or as specified.

7.1.2 General Requirements: The Contractor shall excavate and shape a shoulder drain, swale, or roadside ditch to the size and depth shown on the plans. The Contractor shall remove and dispose of all excavated materials.

Unless otherwise indicated in the project specifications, construction of shoulder drains, swales, and roadside ditches shall be considered part of the grading of the project and incidental to other pay items for the project work.

7.1.3 Method of Measurement: Shoulder drains, swales and roadside ditches shall be measured by the linear foot along the centerline of the bottom of the drain, swale or ditch, and not including any banks.

7.1.4 Basis of Payment: Accepted quantities of shoulder drains, swales and roadside ditches will be paid for at the contract unit price per linear foot.

7.2 Riprap

7.2.1 Description: For furnishing and installing complete and in place, all labor, materials and equipment necessary for the installation of riprap. The bid price shall include, but not be limited to, all costs for all excavation, geotextile fabric, riprap stone, grading and cleanup necessary to complete the work as shown on the plans or as specified.

7.2.2 General Requirements: Riprap material shall be free of structural defects and shall be sound stone, stone masonry, unreinforced crushed concrete, or other material approved by the Engineer. Stone containing shale, unsound sandstone, or other material that will disintegrate readily shall not be used.

Work shall include excavation and grading to the required depth of riprap placement, and removal and disposal of excavated material.

Geotextile fabric shall be installed to line the bottom and sides of the riprap area, and shall be secured with a maximum pin spacing of three feet and a minimum of

18 inch overlap between adjacent pieces. Geotextile fabric shall be an 8 oz nonwoven needle-punched fabric material.

Unless otherwise specified, riprap shall be placed a minimum of 18 inches thick and shall have the following gradation requirements:

Gradation Requirements	
Size, in.	Percent Smaller
18	100
12	90-100
6	20-40
3	0-10

7.2.3 Method of Measurement: Riprap shall be measured by the square yard for the specified thickness.

7.2.4 Basis of Payment: The accepted quantities of riprap shall be paid for at the contract unit price per square yard.

7.3 Chain-link Fencing

7.3.1 Description: For furnishing and installing complete and in place, all labor, materials and equipment necessary for the installation of fencing. The bid price shall include, but not be limited to, all costs for all excavation, fence posts, concrete footing, post caps, top rails, fencing wire, and cleanup necessary to complete the work as shown on the plans or as specified.

7.3.2 General Requirements: Zinc coated steel fencing shall conform to the specification provisions of ASTM A392 and ASTM F155. The wire used to manufacture the fabric shall be 9-gauge steel coated with zinc.

Fence posts shall be placed at uniform distances, 10 feet apart. Posts shall be set in proper alignment and plumb. When necessary, the fence post shall be set in a concrete footing. Posts shall be furnished with the necessary tie wires or fabric banks for fastening the fabric to the posts. Posts shall have post caps and top rails shall be provided.

7.3.3 Method of Measurement: Fencing shall be measured by the linear foot from outside post to outside post for the fence height specified.

7.3.4 Basis of Payment: The accepted quantities of fencing shall be paid for at the contract price per linear foot.

8. TRAFFIC CONTROL DEVICES AND LIGHTING

Applicable Non-Reimbursable Items, Division A, Section 12.3, apply to all of the following Traffic Control Devises and Lighting pay items.

All traffic control devices shall be installed per City of Elkhart Specifications. All materials and work associated with the installation of traffic control devices not specifically covered shall comply with the current INDOT Specifications and Standard Drawings. All traffic control devices shall comply with the current Indiana MUTCD, or Federal MUTCD if not covered in the Indiana MUTCD.

The Contractor shall submit two sets of shop drawings to the City Engineer or his/her representative for approval for all signal poles, mast arms, light poles, street name signs and any other non-standard traffic signs.

The Contractor shall use suitable removed material or "B" Borrow for Structure Backfill in backfilling of all trenches, push holes, around foundations, hand holes, manholes and any other structures. All materials shall be compacted in accordance with 211.04 & 807.05 of current INDOT Standard Specifications. Payment for "B" Borrow for Structure Backfill for traffic signal installations and lighting shall be included in the unit prices bid for the related items.

8.1 Pavement Traffic Markings

8.1.1 Description: All material and work associated with pavement traffic markings not specifically covered in this section shall comply with the requirements of Section 808 of the current INDOT Standard Specifications.

8.1.2 General Requirements:

8.1.2.1 Hot Thermoplastic Marking Material

Hot Thermoplastic marking material shall be used on bituminous pavements, unless otherwise specified, and meet the requirements of sections 808.07(b)1 and 921.02(a) of the current INDOT Standard Specifications.

8.1.2.2 Preformed Plastic Marking Material

Preformed Plastic marking material may be used on either bituminous pavement or concrete pavements in accordance with the manufacturer's installation requirements and shall meet the requirements of section 808.07(b)2 and 921.02(b) of the current INDOT Standard Specifications.

8.1.2.3 Epoxy Marking Material

Epoxy marking material shall be used on concrete pavement, unless otherwise specified, and meet the requirements of section 808.07(b)3 of the current INDOT Standard Specifications.

8.1.2.4 Traffic Paint

Traffic paint shall meet the requirements of section 808.07(a) of the current INDOT Standard Specifications.

8.1.2.5 Glass Beads

Glass beads shall meet the requirement of section 921.02(e) of the current INDOT Standard Specifications.

8.1.3 Method of Measurement: Pavement traffic markings shall be measured in place per lineal foot (e.g., line, material, type, color, width) or per each (e.g., pavement message marking, material, message).

8.1.4 Basis of Payment: The accepted quantities will be paid for on a line item basis per the contract unit price.

8.2 Signalization

8.2.1 Description: All materials and work associated with the installation of traffic signals not specifically covered in this section shall comply with Sections 805 and 922 of the current INDOT Standard Specifications.

8.2.2 General Requirements:

8.2.2.1 General

QUALITY

All equipment furnished under this specification shall be substantially constructed and shall be of thoroughly good quality in design, material, workmanship and finish. It shall be the product of a responsible American Manufacturer, when available, having established reputation and extensive experience in the manufacture of traffic control equipment.

WARRANTY

The manufacturer's normal warranties for all equipment for which guarantees are normally provided shall be assigned and delivered

to the City. Should a defect develop under normal and proper use within three years after acceptance by the City, or within the guarantee time of the warranty, whichever is greater, such defect shall be corrected by and at the expense of the Contractor. Costs for provisions and performance of guarantees and warranties herein described shall be incidental to and included in the units price bid for the various traffic control items.

UNIFORMITY

All like pieces of equipment shall be of the same type and manufacturer in order to assure uniformity, interchangeability of components, single responsibility and most satisfactory service.

MAINTENANCE

During the various construction phases and all test periods the Contractor shall provide maintenance on all installed equipment. This includes maintenance on all hardware equipment from the time the equipment is installed to the day of final acceptance of the complete system. Normal maintenance of existing individual signal controllers shall remain the responsibility of the City throughout the duration of the project.

GENERAL PROVISIONS

The Contractor shall note that there are utilities in the area of construction. The Contractor shall contact all utility companies prior to any underground work or digging and be in accordance with applicable utility locate rules.

The Contractor shall examine the proposed work and be familiar with the materials required to complete the contract. The Contractor shall furnish any additional materials that are required to make a complete operating installation as intended in the contract.

The location of signals, mountings of controllers, etc. is shown on the plans; however, the right is reserved by the Engineer to change the location of these during the term of the contract.

The Contractor shall notify the Engineer at least five working days prior to the starting of work on the project and again three working days prior to the signal being placed in full operation.

The Contractor shall order all traffic control equipment and necessary materials within seven calendar days after receipt of an order to proceed. Copies of all orders shall be given to the City Engineer.

The Contractor shall submit the make and model of all traffic signal equipment for approval.

8.2.2.2 Traffic Signal Controllers & Cabinet

For the furnishing and installation of a solid state controller with hard wired back panel and NEMA PLUS Conflict Monitor, cabinet and concrete foundation all of which shall meet the requirements of Sections 805 and 922.01 of the current INDOT Standard Specifications. All cabinets shall be installed on a foundation that complies with the current INDOT Standard Drawing 805-SGCO-01 through 03. The price of the foundation shall be included in the price of the cabinet. Two packets described as packets #2 & #3 in 922.01(b) of the current INDOT Standard Specifications shall be furnished. One will be placed in the controller cabinet and one will be given to the City of Elkhart Traffic Division during start-up. The Contractor shall notify the Traffic Supervisor 24 hours before start-up is to commence. The Controller and Cabinet manufacturer and model number shall be approved by the City's Traffic Division.

TRAFFIC SIGNAL CONTROLLERS

The controller shall be a TS2 Type 2 controller, malfunction management unit (MMU) and shall be interchangeable with existing controllers used and maintained by the City of Elkhart. It shall have remote access capability.

MMU data shall be retrievable both directly from the MMU and from the Controller. MMU data must be accessible via remote connection. The MMU must be able to monitor and display the voltage level of the AC line, Red Enable and all signal voltages. The capability must show current state if normal or the latched state at the time of failure if in fault. The MMU must store an active voltage log based on user defined low and high thresholds. The record must begin when an out of range value is detected and continues until no out of range values are detected for five consecutive minutes. The MMU must be able to monitor and record voltages during both normal ranges as well as abnormal ranges. The MMU must provide a voltage log history of how many times the voltages dropped below or exceeded certain voltage

levels with increments of five volts. The MMU shall have an information display screen as well as lights.

All controllers shall be equipped with logging capability. Data shall be downloadable via Ethernet in the field. Logging capability shall be enabled prior to final acceptance.

The controller shall be programmed so that the phases 2 and 6 represent the through movements on the main street. Phase 2 shall represent the northbound or eastbound movement. If the volumes on both streets are approximately equal, phase 2 and 6 will be programmed on the north/south street.

All controllers are to be programmed to transition out of flash mode in accordance with the current federal MUTCD. The transition from yellow-red flash shall occur at the beginning of the green interval on the major street. The transition from an all red flash shall have a six second red clearance interval prior to the beginning of the green interval on the major street.

All signal materials and equipment shall be of a type, model and make currently used and maintained by the City of Elkhart.

TRAFFIC SIGNAL CABINET

The cabinet shall be type P unless otherwise specified and shall meet the requirements of section 922.01(g) of the current INDOT Standard Specifications.

The cabinet door shall contain a police panel with lock and two keys and a three mode selector switches. The switches shall permit selection of the following operational modes: “MANUAL”, “SIGNALS OFF” and “FLASHING”. At THE SWITCH POSITION, AC+ control shall be maintained on all control equipment, including detector amplifier units, within the cabinet. In the “SIGNALS OFF” switch position, controller timing shall resume from where it was stopped. The conflicting green protection shall not be reset, if tripped by transferring switch positions. The switches shall be properly labeled. Switch terminals on the rear of the police panel shall be insulated so that no live parts are exposed. The switches shall be mechanically interlocked to prevent selection of other than the specific modes. A switchcraft L-11 or equivalent to accommodate male littleplug-No. 250 or equal shall be included and wired to the proper circuits for manual control of any signal interval through a double row terminal strip. The switches shall be protected from water when the door is open.

The cabinet shall contain auxiliary power switch, detector test push-button panel and two-position toggle switches which will operate vertically up and down. The toggle switches shall be a "CONTROL EQUIPMENT POWER" switch, a "MANUAL" OR "TOP TIME" switch and a "FLASHING" switch wired in conjunction with the same switch in the police panel. The "CONTROL EQUIPMENT POWER" switch shall include controller, conflict monitor, etc. With the switch in the up position, the power shall be "ON" and in the down position the power shall be "OFF". The switch shall not affect the power to the detector amplifier units. AC+ power to the detector amplifier units shall not be switched.

Manual and time switch control of flash operation shall be provided. The manual flash switch shall be the "FLASH" position of the switches in the police panel and cabinet auxiliary switch panel. Manual flash shall occur at any point in the cycle with or without the controller, conflict monitor, or similar associated equipment connected in the cabinet. The automatic time switch change from flashing to stop and go operation shall be made at the coincident beginning of the common major street green intervals. The automatic change from stop and go to flashing operation shall be made at the end of the common major street red interval. The end of the common major street red interval shall be all red clearance interval of the cross street or cross carrier phase or phases preceding any one or more of the major street phases. Time switch flash acquire shall be in such cross street all red clearance interval. The controller shall not accumulate added initial during periods of time switch selected flash operation. The prevention of added initial shall not interrupt or open continuous phase call initiation immediately on acquired flash call initiated immediately on acquired flash operation.

Indications flashed on one intersection approach shall be on the same flasher circuit.

Test push-buttons shall be provided for each vehicle phase and each pedestrian phase. They shall be properly labeled with appropriate controller phase. The push buttons for the vehicle phases shall be capable of extending the associated phase by continuous or intermittent contact. A pre-emption test push button shall be included when a pre-emption sequence is specified.

The controller cabinet finish coat color shall be aluminum, unless otherwise specified.

There shall be a battery backup system supplied with all of the hardware necessary to fully operate the signal for two hours and operate the signal on flash for eight hours in the absence of external power. There shall be an external connection for a generator, with a switch that switches automatically between commercial power and generator power.

The controller cabinet shall contain six 110-120 volt electrical sockets.

Amplifiers for detection loops shall be capable of providing audible tones and provide for the measurement of frequency, resistance (ohms) and induction. The amplifiers shall be Reno Vehicle Detector, Model C-1200-SS and rack mountable or approved equal.

GROUNDING

Cabinets, pedestals and signal poles shall be grounded. Ground wire shall be No. 6 solid bare copper. Ground rods shall be 1/2 inch diameter (minimum) by 8 feet (minimum) long copper weld ground electrodes. Ground rods shall be installed as close as possible to the element being grounded and shall not be further than two feet from the element. The top of the ground rod shall be driven at least six inches below grade. Ground rods shall not be installed within any cabinet, pedestal or signal pole foundation.

The ground wire shall be connected to the top or side of the ground rod. The ground rod-ground wire connection shall be made by a thermo weld process or an approved alternate. The ground rod and ground wire shall be free of oxidized materials, moisture and other contaminants prior to making the connection.

The free end of the ground wire shall be connected to the grounding lug in the cabinet, pedestal or signal pole. The free end of the ground wire shall enter the foundation through a 1.2 inch PVC entry sleeve installed in the foundation.

Do not install a ground rod or ground assembly for a base mounted cabinet within six feet of a ground rod or ground assembly for a pole or pedestal.
Resistance for all ground rods shall be measured and recorded in the presence of the Engineer with a clamp-on ground resistance meter manufactured by AEMC Instruments, model 3711 or 3731.

If the Contractor does not have the proper instrument, one may be borrowed from the City.

The measurements shall be taken using the UNDERSTANDING GROUND RESISTANCE TESTING guide published by AEMC Instruments. A copy of this guide can be obtained from the AEMC Instruments website www.aemc.com.

A resistance to ground measurement of 15 Ω or less shall be attained for each of the following elements:

- Electric power service
- Signal pole with electric power service
- Signal pole
- Pedestal
- Controller cabinet (base mounted)
- Controller cabinet (pole mounted)
- Controller cabinet (pedestal mounted)

If a ground resistance measurement of 15 Ω cannot be attained with one ground rod an additional (or longer) rod or rods shall be added using a coupling device for ground rod to ground rod connection and driven at least 6 inches below grade. The Engineer shall approve the coupling device. A resistance to ground measurement shall be taken after each ground rod is added.

If a 15 Ω ground resistance measurement cannot be attained after three rods have been driven the Engineer will determine the action to be taken from the following:

- Accept a resistance reading greater than 15 Ω but equal to or less than 25 Ω.
- Provide a ground rod array consisting of two or more ground rod assemblies, bonded together and separated by a distance equal to the length of the longer ground rod assembly.

8.2.2.3 Traffic Signal Mast Arm & Pole Structure (Truss-Type Arm)

GENERAL

The Traffic Signal Mast Arm & Pole shall consist of:

- A round pole complete with anchor base, anchor bolts, hand hole, cable inlet with grommet, grounding lug and pole top.

- A truss-type tapered bracket arm complete with wire inlet and protecting grommet, clevis clamp and chain lug for properly supporting a traffic signal.

All castings shall be clean, smooth, with all details well defined and true to pattern. The mast arm pole and mast arm shall be made from the same material. The mast arm shall be secured to the pole by means of circular clamps, half of which is welded to the mast arm and stainless steel bolts. Welding shall be in accordance with Section 711.32 of the current INDOT Standard Specifications.

MINIMUM DESIGN REQUIREMENTS

The traffic signal pole and mast arm and all appurtenances shall meet the requirements of Section 922.05 of the current INDOT Standard Specifications. The mast arm assembly shall consist of a tapered upper and lower member securely joined by means of vertical struts and spacer plates. Each tapered member shall be formed to a constant width, producing a continuously tapered, uniformly shaped, elliptical section. The pole, anchor base and mast arm shall be aluminum alloy 6036-T6.

COMBINATION SIGNAL-LUMINAIRE POLE & MAST ARMS

The combination pole and the signal and luminaire mast arms shall meet the requirements of section 922.05(c)3 of the current INDOT Standard Specification and the sections above. The combination pole and mast arms material shall be an aluminum alloy 6063-T6.

8.2.2.4 Traffic Signal Steel Strain Pole

The strain poles shall meet the requirements of sections 805 and 922.05(a) of the current INDOT Standard Specification and shall be capable of supporting an 8,000 pound load per section 922.05(a). The Strain poles shall be provided with six bands per pole, anchor bolts and the base skirt.

8.2.2.5 Foundations

Foundations shall meet the requirements of section 805.13 of the current INDOT Standards Specifications.

8.2.2.6 Span Wire

Aircraft cable span and catenary suspension shall meet the requirements of Section 922.06(b) of the current INDOT Standard

Specifications. Tether cable shall meet the requirements of Section 922.06(c) of the current INDOT Standard Specifications.

8.2.2.7 Luminaire Mast Arm

Luminaire mast arms shall meet the requirements of sections 922.05(c)5b of the current INDOT Standard Specifications.

8.2.2.8 Luminaire

Luminaires shall meet the requirements of sections 920.01 of the current INDOT Standard Specifications.

8.2.2.9 Signal Indications

Signal heads shall be either die-cast aluminum or polycarbonate. The indications installation and materials shall meet the requirements of section 805.05 and 922.04 of the current INDOT Standard Specifications. The signal indications shall be 12 inches. The certification of signal indications shall be within 12 months prior to the Contractor purchase date. All signal heads shall be equipped with black louvered aluminum backing plates with reflectorized striping.

LED Traffic Signal Modules

ITE COMPLIANCE

All LED Ball Signal Modules 12 inch (300mm) shall be fully compliant to the ITE VTCSH LED Circular Supplement Specifications dated and adopted June 27, 2005 or the latest adopted version as listed on the ITE website at time of bid. Compliance to the ITE VTCSH-2 Interim Purchase Specification is not sufficient, and will not substitute for compliance to the ITE VTCSH LED Circular Supplement Specifications. Additionally, prior to bid award, the manufacturer shall submit to purchaser, reports from ETL/Intertek, that certify full compliance of all ball LED signal modules, including yellow luminous intensity, to the ITE VTCSH LED Circular Supplement Specifications across the temperature range of -40° Fahrenheit to 165° Fahrenheit. Evidence of full compliance to all required testing methods, procedures and sections as outlined in the above ITE document must be included without any exceptions, changes or omissions. The manufacturer must also submit a data sheet showing the exact catalog number of the items submitted on the bid and the Independent Lab report must show full qualification of this catalog number. Nominal

wattage shall not exceed 6 watts for 12 inch red balls, and 9 watts for 12 inch green balls.

To ensure optimal quality of illumination; uniformity; reliability; and appearance, all ball traffic signal modules shall utilize Hi-flux LED's rated at 1-watt or higher, as their source of illumination. To ensure competency of design and manufacturing, manufacturers of ball, arrow, and pedestrian signal modules shall have a minimum of seven years of experience in utilizing Hi-flux LED's rated at 1-watt or higher, as the source of illumination in their ball traffic signal modules. Additionally, manufacturers must have utilized in excess of 20 million Hi-flux LED's in their LED traffic signal modules during the most recent 10 year period.

All LED 12 inch (300 mm) arrow signal modules shall be fully compliant to the Omni-directional Specifications of the ITE VTCSH - LED Vehicle Arrow Traffic Signal Supplement adopted July 1, 2007 or the latest adopted version as listed on the ITE website. Additionally, prior to bid award, the manufacturer shall submit to purchaser, reports from ETL/Intertek that certify full compliance of LED arrow signal modules, including yellow luminous intensity, to these specification across the temperature range of - 40° Fahrenheit to 165° Fahrenheit. Evidence of full compliance to all required testing methods, procedures and sections as outlined in the above ITE document must be included without any exceptions, changes or omissions. The manufacturer must also submit a data sheet showing the exact catalog number of the items submitted on the bid and the Independent Lab report must show full qualification of this catalog number. The module shall incorporate a single lens approach. In order to optimize optical efficiency; definition of the arrow icon; and uniformity; an arrow cookie-cutter shall be incorporated behind the outer lens. The cookie-cutter shall be solidly attached to the LED printed circuit board with screws, surround the perimeter of the LED array and extend from the surface of the LED printed circuit board towards the lens surface.

All LED pedestrian signal modules shall be fully compliant to the ITE PTCSI Part-2: LED Pedestrian Traffic Signal Modules Specifications Version September 30, 2004, Adopted March 2004 or the latest adopted version as listed on the ITE website at time of bid. Additionally, prior to bid award, the manufacturer shall submit to purchaser, reports from ETL/Intertek that certify full compliance of LED signal modules, to these specification across the temperature range of -40° Fahrenheit to 165° Fahrenheit. Evidence of full compliance to all required testing methods, procedures and

sections as outlined in the above ITE document must be included without any exceptions, changes or omissions. The manufacturer must also submit a data sheet showing the exact catalog number of the items submitted on the bid and the Independent Lab report must show full qualification of this catalog number. Combination hand/person pedestrian signal modules shall incorporate separate power supplies for the hand and the person icons.

In addition to, and in excess of the above applicable ITE specification compliance, the on-board circuitry of all LED traffic signal modules shall include voltage surge protection, to withstand high-repetition noise transients and low- repetition high-energy transients as stated in Section 2.1.8, NEMA Standard TS 2-2003. In addition, the module shall comply with the following standards: IEC 1000-4-5 at 3kV with a 2 ohm source impedance, ANSI/IEEE C62, 41- 2002; IEC 61000-4-12 (6kV, 200A, 100kHz ring wave).

WARRANTY

Manufacturer shall provide at time of bid, a written warranty which provides for repair or replacement of modules that fail to function as intended due to workmanship or material defects within the first 60 months from date of delivery. Modules which exhibit luminous intensities less than the minimum as specified in the ITE specifications as indicated above, within the first 60 months from date of delivery shall be replaced or repaired.

MODULE IDENTIFICATION

Each individual LED signal module shall be identified for warranty purposes. Each module shall have the manufacturer's name, trademark, model number, serial number, date of manufacturing and lot number. The following operating characteristics shall be identified: nominal operating voltage, power consumption and volt-Ampere. Modules shall have a prominent and permanent vertical index indicator such as an up arrow or the word up or top.

8.2.2.11 <u>Pedestrian Indications</u>

The pedestrian indications shall meet the requirements of Section 922.04(b) of the current INDOT Standard Specifications. The indications shall consist of the filled informational symbol messages for "Walk" and "Don't Walk" as shown in the current edition of the MUTCD. The indications shall consist of pedestrian countdown heads. All lens shall meet the latest standards of ITE

(Polycarbonate Lens are acceptable). All signal bodies, cases and faces shall be painted Federal Yellow, unless otherwise specified. The visors shall be the cut-away style (cap visor) painted Federal Yellow, unless otherwise specified, on the outside and flat black on the inside. The "Walk/Don't Walk" Indications shall be 18 inches LED with countdown. All pedestrian indications shall be mounted on the side of the pole furthest from the roadway (back of pole). The location and positions shall meet ADA PROWAG requirements.

8.2.2.12 Pedestrian Push Button

All pedestrian push buttons shall be pressure activated and meet the requirements of the 2010 ADA PROWAG Standards or current version. All buttons shall be activated with a close fist. All switch electronics shall be sealed within the housing. All buttons shall have built in surge protection and shall be able to hold the call for a minimum of five seconds. Buttons shall be able to withstand weather. Buttons shall operate immediately after being completely immersed in water for five minutes and shall not allow ice to form such that it impedes function of the button. Buttons shall be vandal resistant. The button housing shall be cast aluminum powder coated, unless otherwise specified. The button cap shall be 316 stainless steel. The switch shall be solid state electronic Piezo switch rated for 100 million cycles with no moving plunger or moving electrical parts, or approved equal. The button shall be placed no farther than five feet from the ramp landing.

8.2.2.13 Traffic Signal Service Point

If a meter base is required for the supply of service, the service shall be installed in a TESCO Industrial Control Panel Model 27-200LBS on concrete base or approved equal. The service shall have a 50 AMP Main Lug only and a weatherproof panel U.L. labeled "Suitable for Use as Service Equipment." The service shall meet the requirements of Section 805.08 of the current INDOT Standard Specifications.

8.2.2.14 Miscellaneous Equipment

The Contractor shall furnish and install all the necessary miscellaneous equipment to make a completed and operating installation of traffic signals according to the plans, standard sheets, standard specifications and the accepted practice of the industry. This equipment shall consist of, but not necessarily be limited to, the following items:

- Intercepts
- Span Hangers
- Signal Weatherheads
- Balance Adjusters
- Pinnacle Assemblies
- Padlocks
- Ground Rods
- Ground Grid connector
- Thermo Weld Grounding Connection
- # 6 Bare Wire
- 1/4 " Messenger Cable
- 2 Bolt Clamps
- 3/8 " Servi-Clips
- 3/8 " Crosby Clamps
- Post Top Slipfitter
- Post Top Slipfitter for Cabinets
- 1 " Conduit Bushings
- 1 " Conduit Straps
- 1 " Conduit Lock Nuts
- 1 " Conduit Ground Bushings
- 90 degree Conduit Bends
- 1c/14 Stranded Coded Wire (6 colors); not to be used as loop cable
- 1c/14 Stranded Coded Wire (White); not to be used as loop cable
- 2 " Close Nipples
- 2 " Condulets
- 3 Bolt Clamps

All brackets and miscellaneous fittings will be fabricated from aluminum and have bare aluminum sandblasted finish.

NOTE: Cost of Miscellaneous Equipment is to be included in costs of all other items.

8.2.2.15 Conduit

Conduit shall be 3” galvanized rigid steel or polyvinyl chloride (PVC) schedule 40 or higher, or HDPE equivalent, unless otherwise indicated on plans. It shall meet the requirements of sections 805 and 922.10 of the current INDOT Standard Specifications. If a blockage is encountered while pushing conduit and cannot be passed after several push attempts, the Contractor shall excavate and remove the obstruction, and continue pushing operations. All excavation and repair of blockages as well as

excavation and repair of push holes shall be per specifications and the cost of this work distributed among the various related pay items.

Fre-Duct conduit shall be an acceptable alternate for polyvinyl chloride (PVC) conduit for use in detector housings, ground rod entries and magnetometer installations. This use will be for minor quantities only.

8.2.2.16 Handhole

Handhole material shall meet the requirements of sections 805.02 of the current INDOT Standard Specifications. Castings shall meet Section 922.08 of the current INDOT Standard Specifications as well as Section R302.7 in the ADA PROWAG regarding vertical surface. Handholes, in general, shall not be located on curb ramps.

8.2.2.17 Signal Cable

There shall be no cable splices permitted anywhere below surface grade. All signal wire shall be stranded wire and shall meet the requirements of section 805 and 922.06(e)2 of the current INDOT Standard Specifications.

A separate, uninterrupted cable shall be run from the controller to each mast arm or pedestal for each vehicular signal head (or group of heads having the same indications simultaneously) which is to be installed on the mast arm or pedestal. A separate cable shall be run from each signal indication to the pole base for splicing into the feeder cable. No splicing shall be permitted.

8.2.2.18 Ground Wire

Ground wire is to be solid cable in accordance to section 922.06(d)8 of the current INDOT Standard Specifications.

8.2.2.19 Aluminum Detector Housing

Aluminum detector housing installation shall meet the requirements of section 805.08 and 922.11 of the current INDOT Standard Specifications.

8.2.2.20 Vehicle Detectors

The vehicle detector manufacturer and model number shall be approved by the Engineer. All Detector System parts and

components shall be interchangeable with existing Detector Systems used and maintained by the City.

The Detector System shall include all work and equipment necessary to install, program and maintain the detection system.

The Contractor shall coordinate with the material supplier and the Engineer, on correct angle and placement of the image sensors and the detection zones. All detector systems shall be able to detect the presence of bicycles when the option is available.

LOOP DETECTION

Loop detection shall only be used at locations that are unsuitable for other types of detection. Loop detector installation and material shall meet the requirements of Sections 805.09 and 922.06(e)7 of the current INDOT Standard Specifications. Loops shall be Reno pre-formed loops or approved equal. The sealant shall be of a one component polyurethane material.

MICROWAVE DETECTION

This section sets minimum acceptable requirements for a system that detects vehicles on a roadway using microwave based sensors that send a signal representative of a loop type detector in a presence mode to a traffic control device. The sensor and interface board shall operate with 24DVC supplied to the TCIB card and require no other power supplies. Total current shall be no more than 415mA at anytime during operation with no output active. Operation shall be within 20 seconds from a cold start up. Full operation shall be no greater than two minutes and shall provide for full automatic recover from a power failure.

Sensor

The sensor shall function without any degradation of operation at temperatures of -37ºF to +176ºF. It shall be FCC approved. The sensor shall weigh no more than six pounds and be no larger than 7”H x 9”W x 12”L. The sensor shall be a microwave-based motion and presence sensor used for intersection control and shall output signals when vehicles are present in user defined zones. These zones shall be able to be created using an X-Y coordinate system. Zones shall be able to be created, operation shall be able to be verified and optimized using a laptop computer with Internet Explorer or approved equal. The sensor shall allow the user to create up to eight zones and assign vehicle presence in each of

these zones to up to four outputs to the control cabinet representing phase movements. Detection zones shall be able to be created within a distance of 50 - 300 feet from the front of the sensor. The sensor shall track the presence of a vehicle in a detection zone for a predetermined time that is user selectable. It shall be able to track multiple moving and stationary vehicles simultaneously. Each vehicle shall be tracked using its X-Y coordinates. The sensor shall update vehicle location at least five times per second. The sensor shall be able to provide user defined delay and/or extension times for each zone. The sensor shall operate optimally when mounted on the side of a pole at a height of 15 to 19 feet. The sensor shall support five selectable channels of microwave operation and operate in the FSK-4 mode (24.075 GHz, 24.100 GHz, 24.125 GHz, 24.150 GHz and 24.175 GHz) unless otherwise specified. The beam angle shall be an Azimuth of 25 degrees to 100 feet and 20 degrees to 400 feet. Elevation shall be 12 degrees.

Interface Board

The interface modules shall operate at 24DVC. They shall have up to four LEDs to indicate the activity of each zone. There shall be an indication for a fault mode such that all LEDs are on. This action shall place calls on the traffic controller. The interface shall automatically recover from a power failure and start up within 20 seconds of a cold start.

WIRELESS IN PAVEMENT DETECTORS

The system shall detect vehicles using battery powered magnetometers utilizing wireless communication. The system shall consist of one or more vehicle sensor nodes, one or more access points and/or optional wireless repeaters. All communication between components shall be wireless.

Two sensors shall be placed in each lane at the stop bar. Three single sensors shall be placed back in each lane at the spacing indicated on the plans. On streets that are designated as bike routes, a sensor shall be placed at the stop bar in the center of the bike lane or on the right side of the right through lane for detecting the presence of bicycles.

Vehicle Sensor Node (VSN)

The VSN shall consist of a magnetometer, microprocessor, wireless transmitter/receiver and a battery. It shall be contained in a fully encapsulated housing and shall operate at temperatures

from -37ºF to +176ºF. The VSN shall be provided with a plastic enclosure that allows the VSN to be removed from the pavement and relocated. The VSN shall operate from its battery for a minimum of 10 years under normal traffic conditions. It shall recalibrate in the event of a detector lock.

Access Point (AP)

The AP shall be the communication hub of the sensor network and shall be capable of communicating with up to 24 VSN's. It shall operate from 48V, 3 watt or via non-isolated external 10-15 DC, 2 watt power. It shall be capable of providing 1500V isolation and 5kV surge protection. The AP shall operate at temperatures from -37ºF to +176ºF. The cabinet that houses the AP electronics shall be no larger than 12"H x 8"W x 4"D and shall meet NEMA 4X and IP67 standards. The AP shall be capable of transmitting detection information to a centralized server over a cellular data connection, Ethernet, or a serial link. It shall transmit detection information to a 170, 2070, or NEMA traffic signal controller to provide real time detector information. The VSN shall respond within 100 seconds when the AP is powered up.

Wireless Repeater (RP)

When required, a wireless repeater shall be provided. It shall be battery powered. The RP shall operate at temperatures from -37ºF to +176ºF. It shall extend the effective communication range of the VSN to the AP up to 1000 feet. The RP shall be no larger than 6"H x 5"W x 5"D.

Wireless Communication

The wireless detection system shall operate in the unlicensed ISM 2.4 GHz band unless otherwise specified. The AP and VSN shall operate in any one of the 16 channels available in the band. The VSN shall use a Time Division Multiple Access (TDMA) protocol wherein each sensor is assigned a time slot during which it transmits and receives one or more data pockets. All system components shall be synchronized to the same time reference sourced by the AP. There shall be two way communications between the VSN and the AP to ensure integrity over the RF interface.

Software

The vehicle detection system shall be capable of accepting software and firmware upgrades. Software shall be provided to configure the VSN, AP and RP units. Software shall be provided to store and retrieve the detection data. The VSN and RP shall be reconfigurable over the wireless communication interface.

Interface Boards

Interface boards shall be compatible with NEMA 170, 179 and 2070 cabinets. One interface shall be supplied for each sensor as required.

8.2.2.21 Connections

All cable connections to terminal posts shall be made with appropriate fork tongue connectors with crimped connections to signal cables.

8.2.2.22 Underground Installations

When pulling new cable, cable basket grips or similar devices shall be used. Pulling directly on the conductors in a cable shall not be permitted.

8.2.2.23 Hangers

Disconnect hangers will be used only where called out.

8.2.2.24 Fiber Optic Interconnect Cable

All fiber optic cable shall meet the requirements of section 922.06(e)5 of the current INDOT Standard Specifications.

8.2.2.25 Handhole Removal

The Contractor shall remove those handholes, rings and covers as directed by the City Traffic Engineer or shown to be removed on the plans. No separate payment shall be allowed for this work which shall be included in the lump sum item for Removal of Existing Traffic Signal Equipment. Any handholes with existing live cables to remain in place shall not be removed.

8.2.2.26 Salvageable Traffic Signal Equipment

All items shall be salvaged and remain the property of the City unless otherwise specified. It shall be the Contractor's responsibility to remove these items in reusable condition and store them at the Traffic Divisions' designated location. The remaining items shall be removed and disposed of by the Contractor.

8.2.3 Method of Measurement: The unit items will be measured at the following:

Traffic Signal Controller & Cabinet	Per Each
Traffic Signal Mast Arm	Per Each
Traffic Signal Pole Structure (foundations are incidental or included in the pole price)	Per Each
Traffic Signal Heads	Per Each
Pedestrian Signal Heads	Per Each
Pedestrian Push Buttons	Per Each
Traffic Signal Service Point	Per Each
Handhole (handhole removal is incidental)	Per Each
Detection	Lump Sum
Conduit	Linear Foot

8.2.4 Basis of Payment: The accepted quantities will be paid for on a line item basis per the contract unit price (as listed above).

8.3 Traffic Signs

8.3.1 Description: All materials and work associated with the installation of traffic signs not specifically covered in this section shall comply with Sections 802, 910.14 and 919 of the current INDOT Standard Specifications. The placement of all signs shall be in compliance with the current MUTCD and Chapter R4: Supplementary Technical Requirements in the ADA PROWAG.

8.3.2 General Requirements:

8.3.2.1 Maintenance & Installation of Signs

All new or existing traffic signs throughout the project shall be maintained by one of the means described herein. All signs shall be installed per the specifications of this section. The various circumstances and the relative technique to be applied to each are as follows:

SIDE-OF-POLE MOUNTED SIGNS

Contractor shall provide all mounting hardware, labor, equipment and miscellaneous items for the installation of existing and new traffic signs to be mounted on the traffic signal poles as shown in the plans or as directed by the Engineer. The back side of all signs mounted on decorative poles shall match the color of the pole. Existing signs that are to remain shall be removed, cleaned and reinstalled onto the new signal poles as directed by the Engineer.

OVERHEAD MOUNTED SIGNS

Contractor shall provide all mounting hardware, labor, equipment and miscellaneous items for overhead installation of existing and new traffic signs to be mounted on traffic signal mast arms or strain pole span and catenary cable as shown in the plans or as directed by the Engineer.

GROUND MOUNTED SIGNS

Contractor shall provide all mounting hardware, labor, equipment and miscellaneous items for installation of all sign posts and ground mounted signs. All existing ground mount traffic signs and street name signs within the project limits that are to remain after construction is completed, but are in conflict with the new construction shall be removed, relocated temporarily outside the construction area and reinstalled in a suitable location most closely duplicating the original location as possible. No separate payment shall be made for maintaining existing traffic signs.

8.3.2.2 Sign Posts

After installation, all posts shall be vertical. All new sign posts shall be a minimum of 2¼ inch square posts made of a minimum of 14 gauge steel. All posts shall be installed on a minimum 36 inch break away anchor. All posts installed on concrete, asphalt or another hard surface shall be installed on a break out coupler. This coupler shall be a Skidril Break-Out Coupler for 2¼ inch post or approved equal. All signs shall be attached to square posts with 3/8 inch aluminum or zinc drive rivets with a 3/4 inch round head with a plastic washer. When signs are attached to an existing channel post, the signs shall be attached with a flat washer, plastic washer and either a lock nut and washer or a lock nut.

8.3.2.3 Sign Material

The backing material shall be sheet aluminum, 0.080 inches thick. Any signs over 30 inches in size shall be of a thickness that complies with Section 919.01(a)1 of the current INDOT Standard Specifications. All signs shall meet the requirements of the current MUTCD and FHWA Standard Highway Signs for size, color, shape, legend and border. The prismatic reflective material shall be in compliance with Section 919.01(b) of the current INDOT Standard Specifications. The letters, numbers and symbols shall be from non-reflective material that complies with Section 919.01(b)2 of the current INDOT Standard Specifications.

8.3.2.4 Street Name Signs

All street name signs shall have a green background with a white legend. The sign material shall conform to 919.01(b). Legends shall be optically centered and spaced both horizontally and vertically. Letter spacing shall be consistent with conventional traffic sign letter spacing practices for best legibility. Faces shall show careful workmanship. Legends shall be clean-cut and sharp. The street name shall be in Highway EM font and shall be in lower case letters with an initial capital letter. Standard abbreviations for street, avenue, boulevard, etc. shall be used following the street name or number.

The Contractor shall, prior to fabrication, submit two copies of shop drawings to the City Traffic Engineer or his/her representative for approval. The drawings shall include the recommended length of face and letter series for each street name. Payment for each street name sign furnished and installed shall be made at the unit price per each as contained in the itemized proposal.

GROUND MOUNTED SIGNS

All ground mounted signs shall be double faced. They shall be installed in accordance with 8.3.2.1.

Sign Blade: The blade shall be extruded aluminum. It shall be .063 inches thick. The length of the blade shall be determined by the number of letters in the street name, including the prefixes and suffixes. The face shall have a minimum length of 18 inches. The blade shall be nine inches high and shall be mounted to the post with a bracket that is a minimum of 12 inches in length. On multi-lane streets with a posted speed limit of more than 40 mph, the

blade shall be 12 inches high and shall be mounted to the post with a bracket that is a minimum of 12 inches in length.

Legend: The street name shall be in lower case letters with an initial capital letter. The initial capital letters shall be six inches high with lower case letters that are 4½ inches high. On multi-lane streets with a posted speed limit of more than 40 mph, the initial capital letters shall be eight inches high with six inch high lower case letters.

OVERHEAD MOUNTED SIGNS

Overhead Street Name Sign faces shall be single faced.

Sign Blade: The Aluminum Sign Blanks shall be fabricated from .100 inch minimum thickness sheet aluminum and shall otherwise conform to current INDOT Standard Specifications Section 919.01(a). The sign blank shall be 18 inches high and have a corner radius of two inches. The length shall be determined by the number of letters in the street name, including the prefixes and suffixes. The face shall have a minimum length of 48 inches, but may include lengths of 60 inches and 72 inches. The height shall be 18 inches. A minimum distance of two inches shall be allowed between legend and the border. Each sign shall have a one inch outside border with a one inch corner radius.

Legend: The street name shall be in lower case letters with an initial capital letter. The initial capital letter shall be 12 inches high with lower case letters that are nine inches high. If the legend is too large to fit a 72 inch face, approval to abbreviate the street name or use a longer face shall be obtained from the City Traffic Engineer or his/her representative at no extra cost to the project.

Sign Mounting: The street name signs shall be mounted either on the signal mast arm using two mid-mast arm sign mounting bracket assemblies or on the strain pole span and catenary wire using two sign mounting bracket assemblies. The sign shall be mounted as near as practical to the pole shaft.

Mid Mast Arm Sign Mounting Bracket Assembly: This specification provides the minimum standards for an adjustable mid mast arm sign mounting bracket. The bracket assembly shall be adjustable to accommodate the following movements in alignment of the traffic sign: Vertical Adjustment, Rotational Adjustment about mast arm (tilt), and Rotational Adjustment in the vertical plane. The attachment of the bracket to the mast arm shall

be adjustable (without special tools or equipment) to fit the commonly found mast arm shapes. These shapes include, but are not limited to, round, octagonal and elliptical. The bracket shall be provided with Type 201 stainless steel bands or other easily adjustable method to fasten the bracket to the mast arm (See detail drawings at the back of the specifications). The bracket shall attach to the sign by means of a formed tube section arm (See detail drawings at the back of the specifications). The vertical section shall be securely attached to the vertical adjustment section. The formed tube shall be extruded from 6036-T6 and attaching brackets shall be cast from grade 32510 malleable iron, or aluminum. The Type 201 Stainless Steel Band shall have a minimum thickness of 0.050 and a minimum tensile strength of 100,000 psi. Each band shall be complete with screw buckle. Each bracket shall be complete with all necessary bolts, nuts, etc. to attach the traffic sign to the racket to the supporting arm. All aluminum parts shall have an Alodine 1200 finish or equal. All steel or malleable iron parts shall have cadmium or zinc finish.

Strain Pole Span and Catenary Wire Sign Mounting Bracket Assembly: The mounting assembly shall conform to sections 802.08(a) and 910.19 of the current INDOT Standard Specifications. All signs shall be tethered.

8.3.3 Method of Measurement: The unit items will be measured at the contract unit measurement per each. Posts will be included in the sign line item for ground mounted signs.

8.3.4 Basis of Payment: The accepted quantities will be paid for on a line item basis per the contract unit price per each

8.4 Lighting

8.4.1 Description: The installation of street lighting shall meet the requirements of Section 807 of the current INDOT Standard Specifications and Section 920.01 for materials. For lighting placed on combination signal luminaire mast arms, refer to Division A Section 8.2.2.3 of these specifications.

8.4.2 General Requirements:

8.4.1.1 Lighting Approval

Requests for street lighting shall be made to the Engineer for approval. Upon approval the installation will be made by the local power company that supplies service. Decorative street lights will only be considered on special projects. Street lighting shall be

installed at locations indicated on the plans or as directed by the Engineer.

8.4.2.2 Conduit

Conduit shall either be galvanized rigid steel, polyvinyl chloride (PVC) schedule 40 or higher, or HDPE equivalent. It shall meet the requirements of sections 807 and 922.10 of the current INDOT Standard Specifications. If a blockage is encountered while pushing conduit and cannot be passed after several push attempts, the Contractor shall excavate and remove the obstruction, and continue pushing operations. All excavation and repair of blockages as well as excavation and repair of push holes shall be per specifications and shall be incidental.

8.4.2.3 Handhole

Handholes shall meet the requirements of sections 807.09 and 920.01(b)3 of the current INDOT Standard Specifications. Castings shall meet Section 910.05 of the current INDOT Standard Specifications as well as Section R302.7 in the ADA PROWAG regarding vertical surface. Handholes, in general, shall not be located on curb ramps. .

8.4.2.4 Lighting Cable

There shall be no cable splices permitted anywhere below surface grade. All lighting wire shall be stranded wire and shall meet the requirements of section 807.08 and 920.01 of the current INDOT Standard Specifications.

8.4.2.5 Service Point

A meter base is required for the supply of service. The service shall be installed in TESCO Industrial Control Panel Model 27-200LBS on concrete base or approved equal. The service shall have a 50 AMP Main Lug only and a weatherproof panel U.L. labeled “Suitable for Use as Service Equipment.” The service shall meet the requirements of Section 807.15 of the current INDOT Standard Specification.

8.4.2.6 Connections

All cable connections to terminal posts shall be made with appropriate fork tongue connectors with crimped connections to signal cables.

8.4.2.7 Parking Lot Installations

When installed in a parking lot, all light poles shall be mounted in a concrete base that is two feet high.

8.4.2.8 Underground Installations

When pulling new cable, cable basket grips or similar devices shall be used. Pulling directly on the conductors in a cable shall not be permitted.

8.4.2.9 Handhole Removal

The Contractor shall remove those handholes, rings and covers as directed by the Engineer or as shown to be removed on the plans. No separate payment shall be allowed for this work which shall be included in the lump sum item for Removal of Existing Lighting Equipment. Any handholes with existing live cables to remain in place shall not be removed.

8.4.2.10 Salvageable Lighting Equipment

All items shall be salvaged and remain the property of the City unless otherwise specified. It shall be the Contractor's responsibility to remove these items in reusable condition and store them at the Traffic Division's designated location. The remaining items shall be removed and disposed of by the Contractor.

8.4.3 Method of Measurement: The unit items will be measured at the contact unit of measurement in place.

Pole Structure (foundations are incidental or included in the pole price)	Per Each
Service Point	Per Each
Handhole (handhole removal is incidental)	Per Each
Conduit	Linear Foot

8.4.4 Basis of Payment: The accepted quantities will be paid for on a line item basis per the contract unit price (as listed above)

9. LANDSCAPE

Applicable Non-Reimbursable Items, Division A, Section 12.3, apply to all of the following Landscape pay items.

9.1 Seeding

9.1.1 Description: For furnishing and installing, complete and in place, all labor, materials and equipment necessary for the installation of topsoil, seed, fertilizer and mulch in tree lawns and lawns. The bid price shall include, but not be limited to, all costs for grading, furnishing and spreading four inches of screened topsoil free of rock and debris, grass seed, starter fertilizer, mulch, maintenance, watering, cleanup and all other operations necessary to establish grass.

9.1.2 General Requirements:

Material

The grass seed shall consist of 50%Kentucky bluegrass, 35%creeping fescue and 15%turf type perennial ryegrass. Mulch for seeding shall consist of straw, excelsior mulch, excelsior blanket, paper mat, straw mat or wood cellulose fiber mulch.

Preparation of Ground before Seeding

On all areas designated to be seeded, the backfill, fill and embankments shall be brought to a subgrade level four inches below finished grade. When the subgrade has settled, screened topsoil free of rock and debris shall be deposited and spread to a finished depth of at least four inches and fine raked, ready for seeding.

Areas Ready for Seed

The areas shall be lightly raked, loose and pulverized. Grass seed shall then be sown by a mechanical seeder, operating in two directions, and lightly raked into the surface and rolled once with a light hand roller. The seeded areas shall be thoroughly watered with a fine spray in such a manner as to not wash out the seed.

The Contractor shall use care in raking, not to destroy the finished grade, nor to disturb uniform distribution of seed.

Seasonal Limitations

Sowing of seed shall be done only from April 1st thru October 15th unless otherwise approved in writing by the Engineer.

Placement of Mulch

Mulching material shall be applied uniformly in a continuous blanket at a rate of two tons per acre with the exception of wood fiber or cellulose which shall be applied at a rate of one ton per acre. Mulching material shall be placed and anchored within 24 hours after seeding. Anchoring methods may be found in Division B Section 2.3.2.3.

Watering Seeded Area

At a minimum the seeded area shall be watered once daily for the first week, once every second day for the second week, and once every third day for the third week and once a week thereafter. The seeded area shall be maintained for a minimum of eight weeks from the time it is sown before being accepted. During periods of ample rainfall, watering may be modified to simulate the above schedule with approval from the Engineer. During periods of drought and excessive heat, the Contractor may need to increase watering to ensure establishment of grass.

The Contractor shall be required to maintain a watering log and make this log available to the Engineer upon request.

Growth, Establishment and Deadlines

The Contractor shall be responsible for establishing growth of the placed seed. The Contractor shall take whatever steps necessary to establish growth, which may include overseeding, excessive watering, cordoning off the seeded area to prevent mowing, etc. Growth shall be considered established once 70% of the area has live grass established, with no bare areas. A bare area shall be considered a one square yard patch with less than 10% vegetative cover. If the Contractor finds they are unable to establish growth, the Contractor may, at their expense, sod deficient areas.

Final restoration shall include establishment of grass. All Contract deadlines shall include establishment of grass. Due to seasonal limitations, and construction schedules, the Contract deadline may be extended for seeding purposes at the discretion of the Engineer. However, failure to establish growth by the end of the first growing season after construction shall constitute failure to complete the project by the Contract deadline. Liquidated damages may be assessed until 70% coverage has been established.

9.1.3 Method of Measurement: The spreading of topsoil, seed, mulch and fertilizer will be per square yard

9.1.4 Basis of Payment: Seed will be paid for at the contract price per square yard, with a partial payment schedule as follows:

Partial Payment Schedule	
Description	Cumulative Percentage of Bid Price Allowed
4” Topsoil, Seed, Fertilizer, Mulch	30
Watering, Week 4	40
Watering, Week 8	50
Establishment of 70% Coverage	100

9.2 Sodding

9.2.1 Description: Spreading of topsoil, starter fertilizer and laying of sod in tree lawns and lawns.

9.2.2 General Requirements:

Preparation of Ground before Sod

The area where sod is to be placed shall be free of rocks and debris, smooth, uniform and meet the required cross sections. The depth shall be set so the sod will match the existing surrounding surface. Starter fertilizer shall be applied before the sod is laid.

Areas Ready for Sod

Sod shall be laid in the designated direction and shall be fitted to the surrounding grade and fixed objects. The strips shall be butted closely, but not overlapped. After laying and watering, the sod shall be tamped or rolled to ensure contact with the soil underneath. After compaction the sod shall present an even surface with no lumps or depressions.

Seasonal Limitations

The laying of sod shall be done only from April 1st to May 31st and September 1st until temperatures are below 35°F. No sod shall be placed in the months of June, July and August. No frozen sod shall be laid and no sod shall be laid on frozen soil.

Watering Sod

Immediately after laying any sod it shall be watered. The amount of water shall be sufficient to saturate the sod and the upper few inches of the underlying soil. At a minimum the sod shall be watered once daily for the first four weeks, once every second day for the fifth week, and once every third

day for the sixth week and once a week thereafter. Sod shall be maintained for a minimum of eight weeks from the time it is laid before being accepted. During periods of ample rainfall, watering may be modified to simulate the above schedule with approval from the Engineer. During periods of drought and excessive heat, the Contractor may need to increase watering to ensure establishment of grass.

The Contractor shall be required to maintain a watering log and make this log available to the Engineer upon request.

9.2.3 Method of Measurement: The spreading of topsoil and laying of sod shall be per square yard.

9.2.4 Basis of Payment: Sod shall be paid for at the contract price per square yard, with a partial payment schedule as follows:

Partial Payment Schedule	
Description	Cumulative Percentage of Bid Price Allowed
Topsoil & Sod	50
Watering, Week 4	75
Watering, Week 8	100

9.3 Planting Trees

9.3.1 Description: The planting of trees in tree lawns and lawns.

9.3.2 General Requirements:

Protection of Trees
No trees outside the grading limits are to be damaged or trimmed unless permission is granted by the City Engineer or his/her representative. Trophy trees shall be protected as directed by the City Forester.

Inspection of Work
All work done pursuant to this section shall be subject to the inspection of the City Forester.

Removal and Replacement Specifications
Any trees removed shall be replaced at a ratio of three trees provided for every one removed. Any trees within those parameters that cannot be planted within the project limits shall be delivered to the Buildings and Grounds Department to be planted in areas immediately adjacent to the project.

All trees shall come from the following Table 9.1:

Table 9.1
Acceptable Street Trees

Common Name	Latin Name	Size Class
Bottlebrush Buckeye	Aesculus parviflora	Small
Red Buckeye	Aesculus pavia	Small
Allegheny Serviceberry	Amelanchier laevis	Small
Golden Catalpa	Catalpa bignonioides	Small
Redbud	Cercis canadensis	Small
Alternate Leaf Dogwood	Cornus alternafolia	Small
Flowering Dogwood	Cornus florida	Small
Cockspur Hawthorn	Crataegus crusgalli	Small
Washington Hawthorn	Crataegus phaenopyrum	Small
Green Hawthorn	Crataegus viridis	Small
Chokecherry	Prunus virginiana	Small
Nannyberry	Viburnum lentago	Small
Snowball Tree	Viburnum opulus	Small
American Wisteria	Wisteria frutescens	Small
Black Locust	Robinia pseudoacacia	Small/Medium/Large
Freeman Maple	Acer x freemanii	Medium
River Birch	Betula nigra	Medium
Gray Birch	Betula populifolia	Medium
American Hornbeam	Carpinus caroliniana	Medium
Blackgum	Nyssa silvatica	Medium
Ironwood	Ostrya virginiana	Medium
Gambel Oak	Quercus gambelii	Medium
Silver Linden	Tilia tomentosa	Medium
Honeylocust	Gleditsia triacanthos	Medium/Large
Sweetgum	Liquidambar styraciflua	Medium/Large
Boxelder	Acer negundo	Large
Red Maple	Acer rubrum	Large
Sugar Maple	Acer saccharum	Large
Red-Horsechestnut	Aesculus x carnea	Large
Yellow Buckeye	Aesculus octandra	Large
Paper Birch	Betula papyrifera	Large
Bitternut Hickory	Carya cordiformes	Large
Pignut Hickory	Carya glabra	Large
Shellbark Hickory	Carya laciniosa	Large
Shagbark Hickory	Caya ovata	Large
Cmockernut Hickory	Catalpa speciosa	Large

Hackberry	Celtis occidentalis	Large
Beech	fagus grandifolia	Large
Kentucky Coffeetree	Gymnocladus dioicus	Large
Tulip-Poplar	Liriodendron tulipifera	Large
Sycamore	Platanus occidentalis	Large
White Oak	Quercus alba	Large
Swamp White Oak	Quercus bicolor	Large
Northern Red Oak	Quercus rubra	Large
Scarlet Oak	Quercus coccinea	Large
Northern Pin Oak	Quercus ellipsoidalis	Large
Shingle Oak	Quercus imbricaria	Large
Bur Oak	Quercus macrocarpa	Large
Chinkapin Oak	Quercus muehlenbergii	Large
Pin Oak	Quercus palustris	Large
Basswood	Tilia americana	Large
American Elm	Ulmus americana	Large

Each tree species selected shall be evenly distributed within the total number of trees to be replaced. Species distribution shall be in accordance with Forestry Division guidelines set forth in the following Table 9.2:

Table 9.2
Species Distribution

Number of Trees to be Planted	Minimum Species Selection
10 trees or fewer	No fewer than 3 species of trees
11-20 trees	No fewer than 5 species of trees
21-40 trees	No fewer than 8 species of trees
41-60 trees	No fewer than 10 species of trees
61-80 trees	No fewer than 12 species of trees
81-100 trees	No fewer than 14 species of trees
101-150 trees	No fewer than 15 species of trees
151-200 trees	No fewer than 20 species of trees
201 + trees	No fewer than 25 species of trees

The height classes of trees are as follows. Small trees grow to a mature height of 25 feet or less. Medium trees grow to a mature height that is greater than 25 feet but less than 45 feet. Large trees grow to a mature height that is greater than 45 feet.

All trees shall be grown within Zone 5 of the USDA Plant Hardiness Zone Map. All trees supplied shall meet the standards set forth in the current edition of *American Standards for Nursery Stock* and be free of disease and insects.

All trees shall be free of branches to a point not to exceed 60% of actual height. Trunks shall be straight and true, with one central stem and without forking. All caliper measurements shall be taken at a distance of six inches above ground.

All shade trees shall be at least 2½ inches in caliper, balled and burlapped, and at least eight to ten feet in height when planted.

All ornamental trees shall be at least 2½ inches in caliper, balled and burlapped, and at least five to six feet in height when planted.

Trees shall be planted in a manner to evenly distribute all species used throughout the project area, and shall be planted approximately 20 feet apart for small trees, 30 feet for medium trees, and 40 feet for large trees. More specific guidelines can be provided based on the total number of trees to be planted. A formal, detailed landscape plan shall be submitted to the City Forester no less than three weeks before planting is to commence. Species selection and planting locations are subject to the approval of the City Forester. Planting sites shall be field marked by the Contractor one week prior to planting.

Planting Specifications

Pits shall be dug two times larger in diameter than the root ball, and to a depth that allows the root flare to be partially visible after planting. Trees must be centered and plumb in the planting pit. Trees shall not be staked.

All twine must be cut from the top of the root ball, and baskets and burlap should be folded down around the edges of the root ball. There shall be no exposed baskets, twine or burlap.

The root ball must be thoroughly soaked after planting.

All protective wrapping, twine and tags must be removed from trees prior to acceptance by the City Forester. Any branches which are broken during transport or planting shall be trimmed appropriately.

All trees shall be mulched with aged natural mulch around the tree in a circle with diameter of four feet, leaving a four inch diameter circle around the trunk free and clear of any mulch.

No tree lawns that measure less than four feet from the sidewalk to the curb shall be planted with trees. Tree- lawns that measure four feet to six feet shall only have small trees planted within them. Tree-lawns that measure greater than six feet but less than eight feet may be planted with small or medium trees, but shall not be planted with large trees. Tree lawns that measure greater than eight feet may be planted with any size tree. In all plantings preference should be given to the largest acceptable tree size class.

Maintenance and Warranty

Contractor shall submit typewritten instructions recommending procedures to be established by the City for maintenance of landscape work, to begin at the final acceptance of the project, for one full year.

The Contractor shall warranty in writing to the City all trees for three years after final acceptance of the project.
Should the Contractor fail to comply with any or all of the specifications herein specified concerning the handling and planting of said trees at the time of original planting, the Contractor shall be responsible for the replacement and replanting of the trees listed above under these specifications.

9.3.3 Method of Measurement: The planting of trees shall be a per unit item.

9.3.4 Basis of Payment: Payment shall be based on contract price per unit which shall be paid when the trees are placed and approved by the City Forester.

10. TESTING

The Contractor shall furnish all labor, materials, tools and equipment necessary to perform testing and all work incidental thereto. Testing will not be measured for payment. The use of alternative testing methods may be allowed or required in addition to those stated herein as determined necessary by the Engineer. The Contractor shall advise the City of the time and place of all tests so that the City may observe the test in its entirety.

10.1 Water Main Testing

10.1.1 Description: It is the Contractor's duty to provide testing on all newly installed water mains. Testing shall be provided on all water main stubs greater than 15 feet in length. The Contractor should be familiar with procedures for the tests and is thus responsible to follow those procedures to ensure accurate test results. Any costs incurred by the Contractor to provide the following tests will be incidental to the Contract.

10.1.2 General Requirements: The following tests are to be conducted:

10.1.2.1 Hydrostatic Pressure Test for DIP and PVC
The hydrostatic pressure test shall be coordinated with the City prior to filling any pipe.

All new PVC and DIP pipe, or any valved section thereof, shall be subjected to a hydrostatic pressure test. The hydrostatic test pressure shall be 150 pounds per square inch (psi), at the average elevation of the line or section of line under test; and corrected to the elevation of the test gauge to determine the required gauge reading during the test. The duration of each pressure test shall be at least two hours.

After the pipe is laid and the joints completed, the newly laid pipe or any valved section thereof shall be slowly filled with water. The specified test pressure shall be applied by means of a pump connected to the pipe in a manner satisfactory to the Engineer. The pump, pipe connection and all necessary apparatus shall be furnished by the Contractor. The Contractor shall furnish all gauges for the test and arrange to have any required taps made. Certification of the Contractor's gauges may be required by the Engineer.

Before applying the specified test pressure, all air shall be expelled from the pipe. If hydrants or blow-offs are not available at high places, the Contractor shall provide the necessary taps at points of highest elevation before the test is made; and insert approved plugs after the air has been released and before the pressure test.

Leakage is defined as the quantity of water pumped into the newly laid pipe or any valved section thereof, necessary to maintain 150 psi test pressure at the pipe elevation after the pipe has been filled with water and the air expelled. No pipe installation will be accepted until the leakage is less than the number of gallons per hour as determined by the formula:

$$L = \frac{SD\sqrt{P}}{148{,}000}$$

in which L equals the allowable leakage, in gallons per hour; S is the length of pipe tested, in feet; D is the nominal diameter of the pipe, in inches and; P is the average test pressure during the leakage test, in pounds per square inch gauge corrected to the pipe elevation.

The following table lists allowable leakage in gallons per hour per 1,000 feet of main for various size mains.

Table 10.1
Allowable Leakage Per 1,000 Feet of Pipe (Gallons Per Hour)

Pipe Diameter, (inches)	Avg. Test Pressure: 150 PSI Leakage Per 1,000 Feet of Pipe
2	0.0.17
3	0.25
4	0.33
6	0.50
8	0.66
10	0.83
12	0.99
16	1.32
20	1.66
24	1.99
30	2.48
36	2.98

Should any test of pipe laid disclose leakage greater than that specified, the Contractor shall, at his sole expense, locate and repair all defective joints until the leakage is below the specified allowance.

Any cracked or defective pipes, fittings, or valves discovered in consequence of this pressure test shall be removed and replaced by the Contractor at his expense with sound material. All joints showing leakage during the test shall be remade until the pipe section meets the test requirements, or it is abandoned. The hydrostatic pressure test for any pipe section shall be repeated until satisfactory to the Engineer.

10.1.2.2 Hydrostatic Pressure Test for HDPE

The hydrostatic pressure test shall be coordinated with the City prior to filling any pipe.

Pressure testing of HPDE pipe shall be conducted in accordance with ASTM F 2164, Field Leak Testing of Polyethylene Pressure Piping System using Hydrostatic Pressure. All new HDPE pipe or any valved section thereof, shall be subjected to a hydrostatic pressure test. The hydrostatic test pressure shall be 150 pounds per square inch (psi), at the average elevation of the line or section of line under test; and corrected to the elevation of the test gauge to determine the required gauge reading during the test. The test consists of three (3) phases.

Phase 1, preliminary expansion:

- Fill, vent and purge the pipe of trapped air. The pipeline shall be filled with water, but not positively pressurized (other than natural hydrostatic head) for 60-minutes prior to the start of the test.
- Start the test timer at T=0 minutes. Rapidly pressurize the pipe to 150 psi in less than 10 minutes, if possible. Hold the 150 psi pressure for 30 minutes by continually injecting small volumes of make-up water to sustain, but not exceed 150 psi. This will cause the HDPE material to stretch as the pipe expands. Inspect any exposed joints or connections for visible leakage during this period.
- At T=30 minutes, valve-off, isolate and ensure the test pressure is 150 psi. Allow the test pressure to decay for an additional 60 minutes until the timer is T=90 minutes.
- Measure and record the test pressure as P_{90} at T=90 minutes.
- If $P_{90} > 105$ psi, this phase has passed and proceed to Phase 2.
  If $P_{90} < 105$ psi, then the test has failed, either because of a leak or excessive trapped air

Phase 2, air assessment:

- Perform an air volume assessment as follows
  1. Quickly (<5 minutes) and safely bleed out water from the pipeline so as to reduce the pressure by 10% to 15%. Accurately measure and record the pressure drop as ΔP and record the new pressure at T=95 minutes as P_{95}.
  2. Accurately and safely measure and record the water volume bled out as ΔV.

3. Calculate:

$\Delta V_{max\ allowable} = 1.2\ V\ \Delta P\ \{(3.22*10^{-6})+7.66*10^{-6}(D/t)\}$=_____gallons

Where: V = test pipe section volume of water, in gallons
ΔP = measured pressure drop, in "psi"
t = nominal wall thickness, in inches
D = pipe inside diameter, in inches

- When $\Delta V \leq \Delta V_{max\ allowable}$, Phase 2 passes; proceed to Phase 3
- If $\Delta V > \Delta V_{max\ allowable}$, the test has failed and there is excessive trapped air in the system

Phase 3, final:

- After the pressure was dropped about 10% to 15%, and the air assessment calculation were made, the pressure internal to the HDPE pipe should stabilize and remain constant within +/-5% of the reduced pressure P_{95}. Because the HDPE molecules have been "stretched" in Phase 1, upon lowering the water test pressure, the molecules should revert to their original length, and hence should compress the final test volume of water causing the Phase 3 pressure to "rebound" slightly.
- Observe the test pressure for an additional 30 minutes. At T=125 minutes record the test pressure, P_{125}.
- If $P_{125} \geq P_{95}$ the test passes.
- If $P_{125} < P_{95}$ the test fails due to leakage

10.1.2.3 <u>Disinfection</u>

DISINFECTION PROCEDURE

General disinfection of new water mains and stubs will be the obligation of the Contractor in charge of the installation. All pipe must be handled carefully and kept clean during installation. The Contractor may choose the method of disinfection, however the most common method is to introduce calcium hypochlorite in each length of pipe as it is laid. Several cautions must be observed with this method. First, when filling the pipe the water must be introduced slowly to keep the calcium hypochlorite from being flushed to the end of the main. Second, the chlorinated solution must be left in the main a minimum of 72 hours. During this 72 hours all valves, hydrants, etc. along the main must be operated to insure their proper disinfection and to remove all air from the line.

Disinfection may be run in conjunction with hydrostatic pressure testing, once air has been expelled from the line. At the end of the 72 hour (or

longer) period the main must be flushed as described below until the chlorine residual has been reduced below two part per million (ppm).

Bacteriological tests as outlined below shall be taken. If tests do not prove satisfactory it will then be necessary to again disinfect the main using the procedure set forth for disinfection.

FLUSHING

After completing the new main installation, it shall be flushed with water of sufficient velocity (minimum 2.5 feet per second) to remove all dirt and other foreign material. The Contractor shall notify the Engineer, in writing, 24 hours prior to flushing. To determine approximate flow for flushing, assume an average flow from a 2½ inch nozzle of a hydrant will be approximately 1,000 gallons per minute, and from a 4½ inch nozzle approximately 2,500 gallons per minute. Normally a hydrant will be located 20 feet or less from the end of the main. If no hydrant is within 20 feet of the end of the main a two inch or larger tap shall be installed in the plug at the end of the main. The new main shall be flushed to reduce the chlorine residual below two mg/L (ppm).

BACTERIOLOGICAL SAMPLING

Bacteriological sampling is required for all water mains and stubs that are greater than 2 inch diameter. Bacteriological sampling is also required for new water mains and stubs that are longer than 18 feet. A bacteriological test as prescribed by the City shall be performed. Two satisfactory tests on samples taken 24 hours apart are required. If the results fail to meet this minimum standard, the disinfecting procedure must be repeated and the results again tested before placing the main in service. Samples for this test will be collected and analyzed by the City. It is the Contractor's responsibility to schedule and confirm the sampling events at least two business days in advance with the analysis taking place on Monday through Thursday only. The first sample must be taken on Wednesday at the latest and must be in the laboratory by noon

All broken appointments (residual too high, not ready, etc.) shall be charged according to the Schedule of Nonrecurring Charges of the current Utility Tariff.

10.1.2.4 Fire Flow Test (If Applicable)

To conduct a fire flow test, the following steps shall be followed. For safety, always stand behind an open hydrant. Due to the possibility of discolored water the Utility may delay this test until a more appropriate time.

- The two hydrants nearest the property in question shall be selected with one being designated as the "pressure hydrant" and the other as the "flow hydrant." The location of the hydrants and the mains supporting them shall be sketched. Precautions shall be taken to avoid property, pedestrian and vehicular damage from discharging water by viewing the area around the flow hydrant.

- The 2½ inch cap shall be removed from the pressure hydrant and the other caps shall be tightened. The cap gauge shall be attached to the pressure hydrant. The pressure hydrant shall be opened fully and trapped air shall be bled off. The pressure shown on the cap gauge shall be recorded.

- The 2½ inch cap shall be removed from the flow hydrant and the other caps shall be tightened.

- The orifice size (inside diameter) shall be measured to the nearest one-sixteenth inch.

- The discharge coefficient shall be determined by feeling the interior of the nozzle butt where it is attached to the barrel. If the outlet is smooth and rounded, then the discharge coefficient shall be 0.90. If the outlet is square and sharp then the discharge coefficient shall be 0.80. If the outlet is square and projecting into the barrel, then the discharge coefficient shall be 0.70.

- The flow hydrant shall be opened fully.
- The pitot tube shall be placed in the stream after waiting for constant "clear" and consistent flow (no trapped air). The orifice on the pitot blade shall be placed in the center of the stream and the edge of the pitot blade shall be placed ½ the diameter of the nozzle butt away from the nozzle butt. The velocity pressure reading shall be taken and recorded.

- A second pressure reading (residual pressure) shall be taken on the pressure hydrant while the pitot reading is being taken on the flow hydrant and it shall be recorded.

- If the pressure drop of the residual pressure on the pressure hydrant is less than 25% of the original static pressure then the flow hydrant shall be shut down and two 2½ inch nozzle butts shall be opened and a new set of pitot readings shall be taken. Two and one-half inch nozzle butts on additional flow hydrants shall continue to be opened until the 25 percent figure is reached. The pitot readings for every nozzle flow must be recorded to determine the total water flow.

- Both hydrants shall be slowly closed while at the same time; the bleed-off cock on the pressure hydrant shall be opened to allow for proper drainage.

- Both hydrants shall be drained fully by making sure that the water has passed below the level of the "steamer" (pumper connection).

- The caps shall be replaced and tightened.

The static and residual pressures and corresponding flows shall be determined by the formula:

$$Q = 29.83\ cd^2 \sqrt{P}$$

in which Q equals the rate of discharge, in gallons per minute; C is the coefficient of discharge; D is the diameter of the orifice, in inches; and P is the pitot gauge pressure, in pounds per square inch.

10.1.2.5 Tracer Wire Test
For plastic pipe force main and water main, tracer wire shall be tested by the City of Elkhart to verify signal continuity. The installed tracer wire shall transmit a detectable signal on all new plastic pipe, for the entire length of installed pipe.

10.2 Sewer Main Testing

10.2.1 Description: It is the Contractor's duty to provide testing on newly installed sewer main (both sanitary and storm). The Contractor should be familiar with procedures for the tests and is thus responsible to follow those procedures to ensure accurate test results. Any costs incurred by the Contractor to provide the following tests will be incidental to the Contract.

10.2.2 General Requirements: The following tests are to be conducted:

10.2.2.1 Lamp Test
The Contractor shall perform a lamp test to verify the alignment and condition of the pipe. Unsatisfactory alignment may be cause for rejection.

10.2.2.2 Low Pressure Air Test
This test for infiltration shall be performed according to ASTM and the specified pipe material. This practice for testing shall be performed on lines after connection laterals, if any, have been plugged and braced adequately to withstand the test pressure, and after the trenches have been backfilled for a sufficient time to generate a significant portion of the ultimate trench load on the pipe line. The time between the completion of the backfill operation and air testing shall be determined by the Engineer.

Table 10.2 indicates the testing time for concrete and clay pipe in relation to diameter. Table 10.3 indicates testing time for PVC and ABS pipe in relation to diameter.

A low pressure air test shall not be performed on pipe with a diameter greater than 24 inches or on any pipe that has 2 feet or more of groundwater above the top of pipe. In these situations an exfiltration/infiltration test shall be required.

Table 10.2
Testing Time as a Function of Pipe Diameter for Clay and Concrete Pipe

Pipe Diameter, (inches)	Time, (minutes: seconds/100 feet)
6	0:42
8	1:12
10	1:30
12	1:48
15	2:06
18	2:24
21	3:00
24	3:36

Table 10.3
Testing Time as a Function of Pipe Diameter for PVC and ABS Pipe

Pipe Diameter, (inches)	Time, (minutes: second/100 feet)
6	5:40
8	7:34
10	9:26
12	11:20
15	14:10
18	17:00
21	19:50
24	22:47

The low pressure air test shall proceed as follows:

- Plug all openings in the test section.

- Add air until the internal pressure of the line is raised to approximately four psi. After this pressure is reached, allow the pressure to stabilize. The pressure will normally drop as the air temperature stabilizes. This usually takes two to five minutes, depending on the pipe size.

- The pressure may be reduced to 3½ psi before starting the test. Start the test when the pressure has stabilized.

- If the pressure drops more than one psi during the test time, the line is presumed to have failed the test. If a one psi drop does not occur within the test time, the line has passed the air test.

Groundwater above the pipe will reduce air loss. If the section of pipe under test shows significant infiltration, the Engineer may require an infiltration test.

10.2.2.3 Negative Air Pressure Test

Concrete manholes shall be tested in accordance with ASTM C1244-05a^{e1}.

All lift holes shall be plugged. All pipes entering the manhole shall be temporarily plugged, taking care to securely brace the pipes and plugs to prevent them from being drawn into the manhole.

The test head shall be placed at the top of the manhole in accordance with the manufacture's recommendations.

A vacuum of 10 inches Hg shall be drawn on the manhole, the valve on the vacuum line of the test head closed and the vacuum pump shut off. The time shall be measured for the vacuum to drop to 9 inches Hg.

The manhole is acceptable if the time for the vacuum reading to drop from 10 inches Hg to 9 inches Hg meets or exceeds the values indicated in Table 10.4.

If the manhole fails the initial test, the manhole shall be repaired by a method approved by the Engineer until a satisfactory test is obtained.

Table 10.4
Negative Air Pressure Test - Minimum Test Times for Various Manhole Diameters (36-60 inches) in Seconds

Depth (feet)	Diameter, (inches)		
	36	48	60
	Time to drop from 10” Hg to 9” Hg(seconds)		
<4	7	10	13
6	11	15	20
8	14	20	26
10	18	25	33
12	21	30	39
14	25	35	46
16	29	40	52
18	32	45	59
20	35	50	65
22	39	55	72
24	42	59	78
26	46	64	85
28	49	69	91
30	53	74	98

10.2.2.4 Infiltration/Exfiltration Test (If Applicable)

It shall be the intention of these specifications to secure a sewer system including manholes with a minimum amount of infiltration and exfiltration. The maximum allowable infiltration and exfiltration shall be 200 gallons per mile, per inch of diameter of sewer, per 24 hour day, at any time during the day. The joints shall be tight and visible leakage in the joints in excess of that specified above shall be repaired by the Contractor, at the Contractor's own expense, and by any means found necessary. It shall be the Contractors responsibility to conduct the necessary tests, or to make arrangements (at no additional cost the City) for the tests to be made by other qualified parties, to determine if the newly constructed sewer system meets the requirements mentioned above. The infiltration and exfiltration tests shall be made in the presence of the Engineer. The results of the infiltration and exfiltration test on the newly completed sewer must

be submitted to the Indiana Department of Environmental Management, within three months of completion of the sewer construction.

In accordance with the above specifications, the maximum allowable quantity shall be as set forth in the following Table10.5:

Table 10.5
Maximum Allowable Infiltration/Exfiltration

Pipe Diameter, (inches)	Gallon/Day Per 1 L.F.
8	0.3030
10	0.3788
12	0.4545
15	0.5682
18	0.6818
21	0.7955
24	0.9091

10.2.2.5 Mandrel Deflection Test

A five percent Mandrel Deflection test shall be performed on all flexible gravity sewer pipes. The pipe shall be free of debris and checked to see if the internal diameter is not reduced by more than five percent. The Contractor shall provide proving rings to check the mandrel in the presence of the Engineer. The mandrel test shall be conducted no earlier than 30 days after reaching final trench backfill grade. The Mandrel Deflection test shall be performed by pulling the mandrel through a completed sewer run from manhole to manhole.

The Mandrel Defection test shall proceed as follows:

- Run rope with the use of an air compressor from manhole to manhole.
- Attach the rope to the approved mandrel. Attach a second rope to the opposite end of the mandrel so the mandrel can be pulled from both directions in the event it does not pass through the pipe.
- Pull the mandrel (by hand) through the pipe to the manhole.
- Repeat steps for each sewer run to be tested.

Pipe through which the mandrel does not pass will be considered unacceptable, and shall be replaced or repaired by a method approved by the Engineer and retested.

10.2.2.6 Service Lateral Testing

All new service laterals shall be either air or water tested from the the main to the connection just outside of the building. A 10 foot standpipe shall be used for all water tests. Air tests shall be in accordance with Division B Section 10.2.2.2: Low Pressure Air Test. All joints shall be left visible until after the inspection.

10.2.2.7 Televising/Video Inspection

The Contractor shall clean and televise all sewer mains prior to final acceptance. All defects shall be repaired prior to acceptance. The entire video inspection shall be submitted to the Engineer on DVD media format. All televising/video inspections shall include the following summary tables:

1. Sewer Mains Summary Table
    - Lateral location (distance from manhole and direction)
    - Pipe material (and changes in material)
    - Pipe defects
    - Flow direction (and changes in flow direction)
    - Survey direction
    - Length surveyed (ft)
    - Obstructions
    - Manhole identifier
    - Media/tape number
    - Street name of survey

2. Manholes Summary Table
    - Manhole identifier
    - Manhole material
    - Invert elevations
    - Depth

10.2.2.8 Lift Station Start-Up Test

The Contractor shall test lift stations per manufacturer's specifications. The start-up test is to be conducted in the presence of the Engineer and with the use of a generator provided by the City.

10.3 Compaction Testing

10.3.1 Description: It is the Contractor's responsibility to provide compaction testing on representative samples, if requested by the Engineer. Any costs incurred by the Contractor to provide the following tests will be incidental to the Contract.

10.3.2 General Requirements: Compaction tests within the limits of the proposed road-bed shall be performed in 24 inch maximum lifts and in intervals not to exceed 200 feet. Compaction tests not within the limits of the proposed road-bed shall be performed in 24 inch maximum lifts and in intervals not to exceed 500 feet. No compaction tests will be performed until all backfilling has been complete for the testing section.

If a compaction test fails, the Contractor will be required to take another test 25 feet on each side of the failed test location. This process will continue until the tests pass. The Contractor will then be required to compact the failed area until it passes.

Trench, sub-base, and base layers shall meet the following compaction requirements:

- Within a 1:1 influence of existing or proposed pavement or structures-compaction of 96 percent of the minimum dry density, with the top three feet compacted to 100 percent of the maximum dry density.
- Outside of limits pavement or structures-compaction of 90 percent of the maximum dry density.

Density and compaction shall be determined using the following tests:

10.3.2.1 Modified Proctor
Maximum dry density shall be determined in accordance with ASTM D1557 / AASHTO T 180

10.3.2.2 Nuclear Density Testing
Density testing by use of a nuclear gage shall be done in accordance with AASHTO T 310 and ASTM D 6938

10.4 Hot Mix Asphalt Pavement Tests

10.4.1 Description: It is the Contractor's responsibility to provide hot mix asphalt pavement tests on representative samples, if requested by the Engineer. Any costs incurred by the Contractor to provide the following tests will be incidental to the Contract.

10.4.2 General Requirements: The following tests are to be completed (if applicable):

- Extraction Test (AASHTO T 168)
- Sieve Analysis Test (AASHTO T 11, T 27)
- Density Analysis Test (AASHTO T 209, T 245 or T 246, and T 247)

10.5 Portland Cement Concrete Pavement Tests

10.5.1 Description: It is the Contractor's responsibility to provide Portland cement concrete pavement tests on representative samples, if requested by the Engineer. Any costs incurred by the Contractor to provide the following tests will be incidental to the Contract.

10.5.2 General Requirements: The following tests are to be conducted (if applicable):

- Yield Test (AASHTO T 121)
- Slump Test (AASHTO T 119)
- Air Test (AASHTO T 152)
- Flexural Test (AASHTO T 97)

The size of the sample shall be governed by the maximum size of the particle of mineral aggregate in the mixture. The minimum size of the sample must conform to the requirements as shown in the following Table 10.6:

Table 10.6

Maximum Particle Size	Minimum Area of Compacted Mixture
No. 10	36 sq. in.
No. 4	36 sq. in.
3/8 in.	36 sq. in.
1/2 in.	64 sq. in.
3/4 in.	100 sq. in.
1 in.	144 sq. in.
1 1/2 in.	144 sq. in.
2 in.	225 sq. in.

11. RECORD DRAWINGS

The Contractor shall submit to the Engineer preliminary and final record drawings. All costs associated with record drawings shall be incidental to the project unless otherwise specified by the Engineer. Projects with a substantial completion timeline of 45 calendar days or less shall submit preliminary record drawings before substantial completion is given. Projects with a substantial completion timeline greater than 45 calendar days shall submit up-to-date preliminary record drawings with each application for payment.

11.1 General Content

11.1.1 Description: Record drawings shall communicate project specific information on the cover sheet and/or enclosed sheets.

11.1.2 General Requirements: Record drawings shall include, but not be limited to, the following:

11.1.2.1 Cover Sheet

- Project name
- Contractor name & contact information
- City job numbers (provided by the Engineer)
- Project location & vicinity
- Construction dates (beginning & ending)
- Record drawing identifier

11.1.2.2 Each Sheet Containing

- Contractor name
- City job numbers
- Record drawing identifier
- North arrow
- Drawings shall be oriented so North is depicted properly on each sheet
- Plan & profile with standard horizontal & standard vertical scales (showing invert elevations if applicable)
- Corrected elevations shall have a red strike-through over old elevation, with the corrected elevation in red font immediately next to the strike-through elevation
- Sheet numbers

11.2 Water

11.2.1 Description: Record drawings shall communicate the installation of water mains, water services and their appurtenances in the end product.

11.2.2 General Requirements: Record drawings shall include, but not be limited to, the following:

11.2.2.1 Water Main

- Water main diameter and material
- Length of water main between valves and fittings
- Fire hydrant make, model, and location (lot #/address)
- Fire hydrant assembly elements
- Valve size and location (tie-ins) off nearest two street centerlines (if not available off nearest two fire hydrants)
- Fitting (bend, reducer, tee, etc.) location (tie-ins) off nearest two street centerlines and/or parcel line
- Submit one Valve Record Detail Card for each valve made available at Department of Public Works & Utilities or www.elkhartindiana.org/publicworks
- New vs. existing

11.2.2.2 Water Services

- Size, length (water main to curb stop) and material
- Location off street centerline to curb stop and nearest parcel line
- Submit twoService Connection Cards for each connection made available at Department of Public Works & Utilities or www.elkhartindiana.org/publicworks

11.3 Sanitary and Storm Sewer

11.3.1 Description: Record drawings shall communicate the installation of sanitary and storm sewers, sanitary laterals and their appurtenances in the end product.

11.3.2 General Requirements: Record drawings shall include, but not be limited to, the following:

11.3.2.1 Sewer Main

- Length, diameter, material and slope (%) of pipe including stubs (plan and profile)
- Stubs shall show the measurement to the nearest centerline
- Classification of pipe (sanitary vs. storm)
- Invert elevation at the end of all mains and stubs
- New vs. existing

11.3.2.2 Structures

- Location
- Type (clean out, dry well, headwall, lift station, manhole, plug, tee, etc.)
- Classification of structure (sanitary versus storm)
- Material
- Diameter of structure (if different than standard)
- Diameter of pipes
- Invert elevation and direction of all pipes (plan and profile)
- Rim elevation
- Sump depth (storm)
- new vs. exisiting

11.3.2.3 Sewer Laterals

- Lateral detail box
- Length, diameter and material
- Scaled tap distance from downstream manhole
- Depth of pipe at right-of-way
- Active vs. inactive at time of installation
- If a cleanout is installed, measurement from end of pipe, center line, back of curb, or sidewalk

11.4 Traffic

11.4.1 Description: Record drawings shall communicate traffic conduit, wiring and traffic appurtenances in the end product.

11.4.2 General Requirements: Record drawings shall include, but not be limited to, the following:

11.4.2.1 Conduit and Wiring

- Number, size and material
- Location and depth
- Hand hole location

11.4.2.2 Traffic Appurtenances

- Location of poles, mast arms and signal head direction
- Location of pedestrian heads and pedestrian push buttons
- Location of controller and electric service points (if applicable)
- Wattage and location of street lights

11.5 Deliverables

11.5.1 Description: Digital files associated with the production of record drawings.

11.5.2 General Requirements: Digital files shall be burned to DVD/CD media or USB thumb drive format labeled with Project Name, Date and City Project Number. Digital files can be delivered via email or FTP with approval from the Engineer. PDF files shall be grey scale with only record drawing information in red. Digital files to be delivered are following:

11.5.2.1 Digital Drawing Files

- DWG file format
- Sheet set (combined into single DWG file)
- XRef's bound to drawings with correct path set in DWG
- All associated files and entities (SHX, JPG, etc.)
- Folder/universal file path and links (relative path)
- Plan layers and final record drawing layers (strikethroughs for corrections in bold red font).

Division C - Standard Drawings

I hereby certify that these Standard Specifications for Construction were prepared by me, or under my direct supervision and that I am a Duly Registered Professional Engineer under the laws of the State of Indiana.

Date: _____

_____

Michael C. Machlan
Registered Professional

Engineer

State of Indiana No. 900532

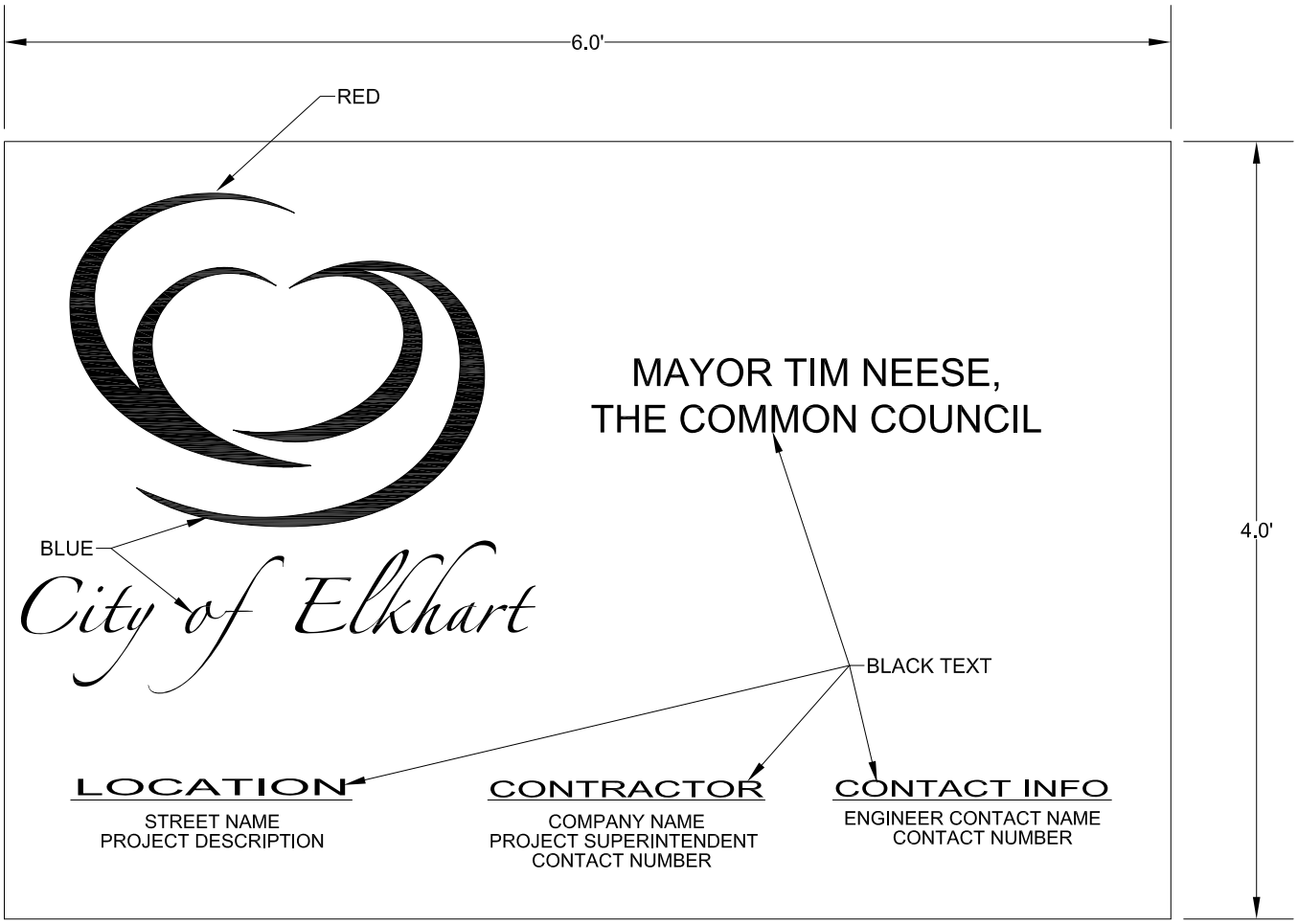

THE CONTRACTOR IS REQUIRED TO FURNISH AND INSTALL TWO SIGNS AS SHOWN ABOVE. THESE SIGNS WILL BE LOCATED AT A LOCATION ALONG THE JOB SITE, THEIR LOCATIONS WILL BE DETERMINED BY THE ENGINEER. THE COST TO FURNISH, INSTALL AND MAINTAIN THESE SIGNS WILL BE MERGED INTO ONE OF THE CONTRACT'S BID ITEMS.

City of Elkhart PUBLIC WORKS & UTILITIES ENGINEERING DEPARTMENT	TITLE: PROJECT SIGN			
	DRAWN BY: JJS	DATE: 01/27/16	SCALE: N.T.S.	DRAWING NO. A7-1

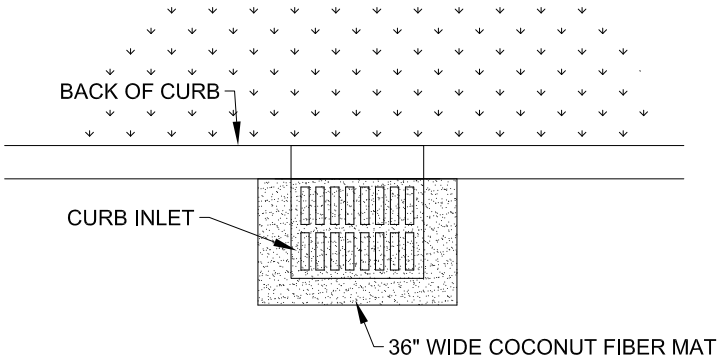

COCONUT FIBER MAT METHOD

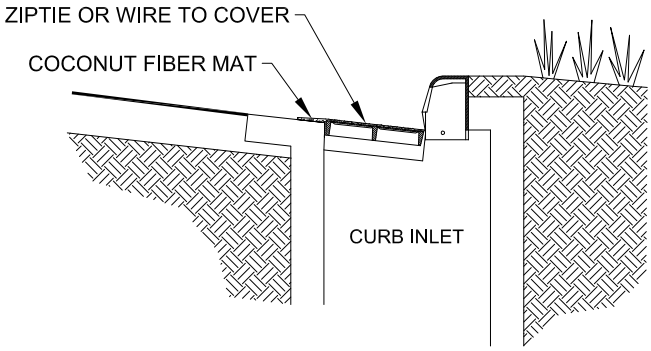

INSTALLATION NOTES:

1. USE COCONUT FIBER MAT FOR SEDIMENT BARRIER WHEN CURB INLET IS LOCATED IN GENTLY SLOPING STREET, WITH MINIMAL NEED, WHERE WATER CAN FILTER AND ALLOW SEDIMENT TO SEPARATE FROM RUNOFF.
2. BARRIER SHALL ALLOW FOR OVERFLOW FROM SEVERE STORM EVENT.
3. SECURE MAT TO INLET COVER WITH ZIPTIES OR WIRE.

MAINTENANCE NOTES:

1. INSPECT DAILY
2. REMOVE SEDIMENT AFTER EACH STORM EVENT. SEDIMENT MUST BE REMOVED FROM THE TRAVELED WAY IMMEDIATELY.
3. REPLACE DAMAGED OR DEGRADED MATS IMMEDIATELY.
4. WHEN THE CONTRIBUTING AREAS HAVE BEEN PERMANENTLY STABILIZED, REMOVE INLET PROTECTION.

City of Elkhart

PUBLIC WORKS & UTILITIES
ENGINEERING DEPARTMENT

TITLE:
CURB INLET PROTECTION

DRAWN BY: JJS	DATE: 02/11/14	SCALE: N.T.S.	FIGURE NO: 2-1

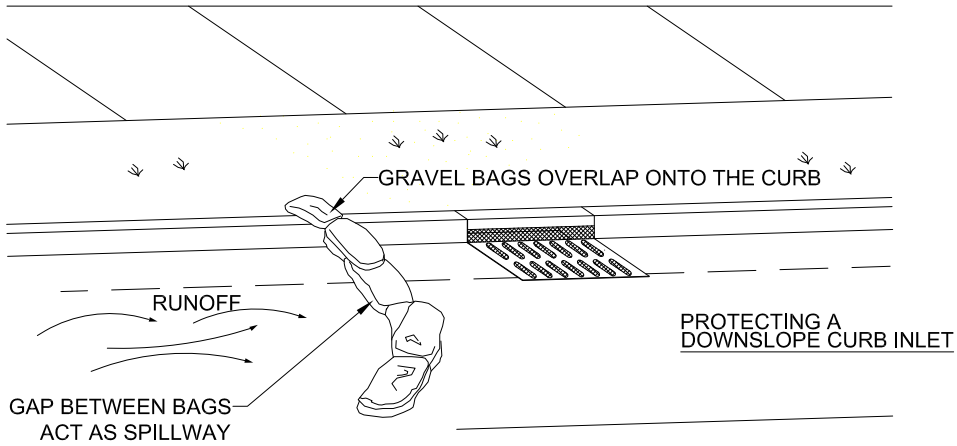

STONE BAG CURB METHOD

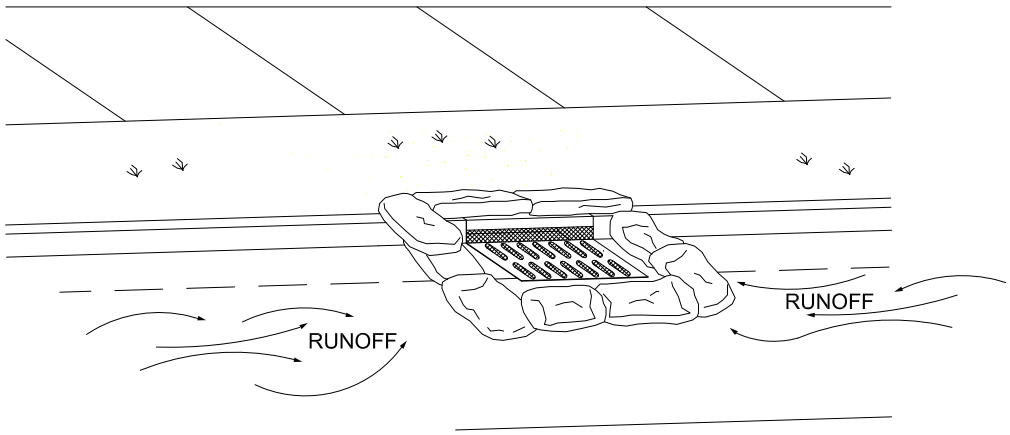

INSTALLATION NOTES:

1. FILL BAGS APPROXIMATELY ONE-HALF FULL WITH WASHED GRAVEL OR AGGREGATE.
2. FOR INLETS LOCATED DOWN GRADE.
   A. AT A POSTION(S) UP SLOPE OF THE INLET, LAY BAGS TIGHTLY IN A ROW CURVING UP SLOPE FROM THE INLET AND AWAY FROM THE CURB.
   B. OVERLAP BAGS ONTO CURB AND EXTEND A MINIMUM OF THREE FEET INTO THE STREET, KEEPING BAGS TIGHTLY ABUTTED TOGETHER.
   C. FOR ADDITIONAL LAYERS OF BAGS, OVERLAP THE BAGS WITH THE ROW BENEATH AND LEAVE A ONE-BAG GAP (AT OR BELOW CURB HEIGHT) IN THE MIDDLE OF THE TOP ROW TO SERVE AS A SPILLWAY. IF THE SPILLWAY HEIGHT IS HIGHER THAN THE TOP OF THE CURB, PLACE ADDITIONAL BAGS ALONG THE CURB TO PREVENT BYPASS FLOW.
   D. FOR ADDITIONAL STORAGE CAPACITY, CONSTRUCT A SERIES OF STONE BAG BARRIERS ALONG THE CURB SO EACH ONE TRAPS SMALL AMOUNTS OF SEDIMENT.
3. FOR INLETS LOCATED AT LOW POINTS
   A. PLACE BAGS IN AN ARC AROUND CURB INLET.
   B. OVERLAP BAGS ONTO THE CURB, KEEPING BAGS TIGHTLY ABUTTED TOGETHER.
   C. FOR ADDITIONAL LAYERS OF BAGS, OVERLAP THE BAGS WITH THE ROW BENEATH AND LEAVE A ONE-BAG GAP (AT OR BELOW CURB HEIGHT) IN THE MIDDLE OF THE TOP ROW TO SERVE AS A SPILLWAY. IF THE SPILLWAY HEIGHT IS HIGHER THAN THE TOP OF THE CURB, PLACE ADDITIONAL BAGS ALONG THE CURB TO PREVENT BYPASS FLOW.
4. PLACE A TRAFFIC BARRICADE AT EACH INSTALLED MEASURE FOR SAFETY AND TO PROTECT MEASURE INTEGRITY.

MAINTENANCE NOTES:

1. INSPECT DAILY.
2. REMOVE ACCUMULATED SEDIMENT FROM PAVED AREA (DO NOT FLUSH WITH WATER) AFTER EACH STORM EVENT. DEPOSIT SEDIMENT IN AN AREA WHERE IT WILL NOT RE-ENTER THE PAVED AREA OR STORM DRAINS.
3. INSPECT FOR DAMAGE BY VEHICULAR TRAFFIC AND REPAIR IF NEEDED.
4. WHEN THE CONTRIBUTING DRAINAGE AREAS HAVE BEEN STABILIZED, REMOVE INLET PROTECTION.

City of Elkhart

PUBLIC WORKS & UTILITIES
ENGINEERING DEPARTMENT

TITLE:
CURB INLET PROTECTION

DRAWN BY: JJS	DATE: 02/11/14	SCALE: N.T.S.	FIGURE NO: 2-2

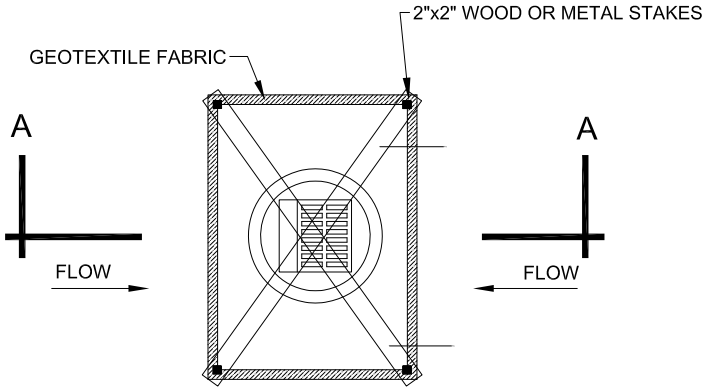

PLAN VIEW

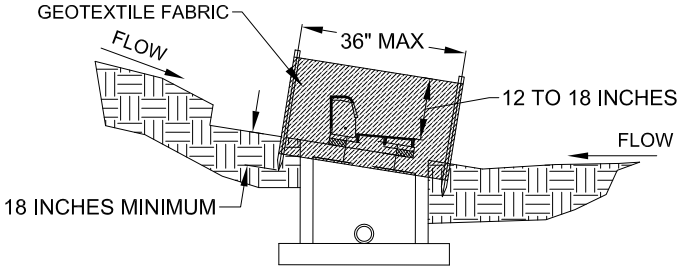

SECTION

INSTALLATION NOTES:

1. DIG AN EIGHT-INCH DEEP, FOUR-INCH WIDE TRENCH AROUND THE PERIMETER OF THE INLET.
2. IF USING PRE-ASSEMBLED GEOTEXTILE FABRIC AND POSTS, DRIVE THE POSTS INTO THE SOIL, TIGHTLY STRETCHING THE GEOTEXTILE FABRIC BETWEEN POSTS AS EACH IS DRIVEN. (POSTS MUST BE PLACED ON THE INLET SIDE OF THE ANCHOR TRENCH WITH THE GEOTEXTILE FABRIC ON THE SIDE OF THE TRENCH FARTHEST FROM THE INLET.)
3. JOIN THE FENCES BY PLACING THE END POST OF THE SECOND FENCE INSIDE THE END POST OF THE FIRST FENCE. ROTATE BOTH POSTS AT LEAST 180° IN A CLOCKWISE DIRECTION TO CREATE A TIGHT SEAL WITH THE FABRIC MATERIAL. DRIVE BOTH POSTS ABOUT 18" INTO THE GROUND AND BURY FLAP.
4. PLACE THE BOTTOM 12 INCHES OF GEOTEXTILE FABRIC INTO THE EIGHT-INCH DEEP TRENCH, LAYING THE REMAINING FOUR INCHES IN THE BOTTOM OF THE TRENCH AND EXTENDING AWAY FROM THE INLET.
5. BACKFILL THE TRENCH WITH SOIL MATERIAL AND COMPACT IT IN PLACE.
6. BRACE THE POSTS BY NAILING BRACES INTO EACH CORNER POST OR UTILIZE RIGID PANELS TO SUPPORT FABRIC.

MAINTENANCE NOTES:

1. INSPECT WITHIN 24 HOURS OF A 0.5" RAIN EVENT AND AT LEAST ONCE EVERY SEVEN CALENDAR DAYS.
2. IF FABRIC TEARS, STARTS TO DECOMPOSE, OR IN ANY WAY BECOMES INEFFECTIVE, MAKE REPAIRS OR REPLACE IMMEDIATELY.
3. REMOVE SEDIMENT FROM POOL AREA TO PROVIDE STORAGE FOR THE NEXT STORM EVENT. AVOID DAMAGING OR UNDERCUTTING FABRIC DURING SEDIMENT REMOVAL.
4. WHEN CONTRIBUTING DRAINAGE AREA HAS BEEN PERMANENTLY STABILIZED, REMOVE SEDIMENT, PROPERLY DISPOSE OF ALL CONSTRUCTION MATERIAL, GRADE AREA TO THE ELEVATION OF THE STORM DRAIN INLET TOP, THEN STABILIZE IMMEDIATELY.

PRE-BITUMINOUS PAVEMENT

City of Elkhart

PUBLIC WORKS & UTILITIES
ENGINEERING DEPARTMENT

TITLE: STORM SEWER INLET PROTECTION

DRAWN BY: JJS	DATE: 02/11/14	SCALE: N.T.S.	FIGURE NO: 2-3

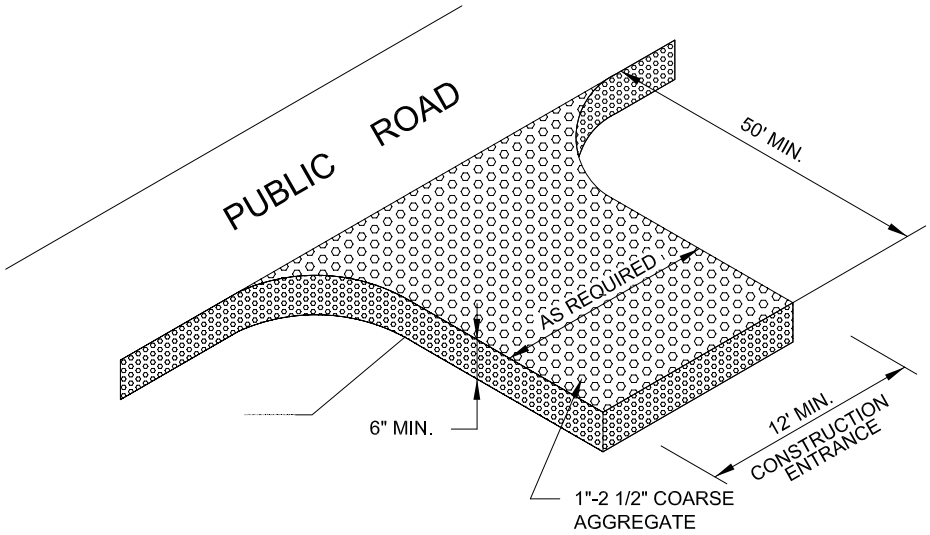

INSTALLATION NOTES:

1. REMOVE ALL VEGETATION AND OTHER OBJECTIONABLE MATERIAL FROM THE FOUNDATION AREA.
2. GRADE THE FOUNDATION AND CROWN FOR POSITIVE DRAINAGE.
3. INSTALL A CULVERT PIPE UNDER THE PAD IF NEEDED TO MAINTAIN PROPER PUBLIC ROAD DRAINAGE.
4. PLACE GEOTEXTILE FABRIC ON THE GRADED FOUNDATION TO IMPROVE STABILITY.
5. PLACE AGGREGATE (INDOT CA NO.2) TO THE DIMENSIONS AND GRADE SHOWN IN THE CONSTRUCTION PLANS, LEAVING THE SURFACE SMOOTH AND SLOPED FOR DRAINAGE.
6. TOP-DRESS THE DRIVE WITH WASHED AGGREGATE (INDOT CA NO.53) AS DIRECTED.
7. WHERE POSSIBLE, DIVERT ALL STORM WATER RUNOFF AND DRAINAGE FROM THE TEMPORARY CONSTRUCTION INGRESS/EGRESS PAD TO A SEDIMENT TRAP OR BASIN.

MAINTENANCE NOTES:

1. INSPECT DAILY
2. RESHAPE PAD AS NEEDED FOR DRAINAGE AND RUNOFF CONTROL.
3. TOP-DRESS WITH CLEAN AGGREGATE OR REMOVE & REPLACE AGGREGATE AS NEEDED.
4. IMMEDIATELY REMOVE MUD AND SEDIMENT TRACKED OR WASHED ONTO PUBLIC ROADS.
5. FLUSHING SHOULD ONLY BE USED IF THE WATER FROM THE CONSTRUCTION DRIVE CAN BE CONVEYED INTO A SEDIMENT TRAP OR BASIN.

City of Elkhart

PUBLIC WORKS & UTILITIES
ENGINEERING DEPARTMENT

TITLE:
TEMPORARY GRAVEL ACCESS PAD

DRAWN BY: JJS	DATE: 02/11/14	SCALE: N.T.S.	FIGURE NO: 2-4

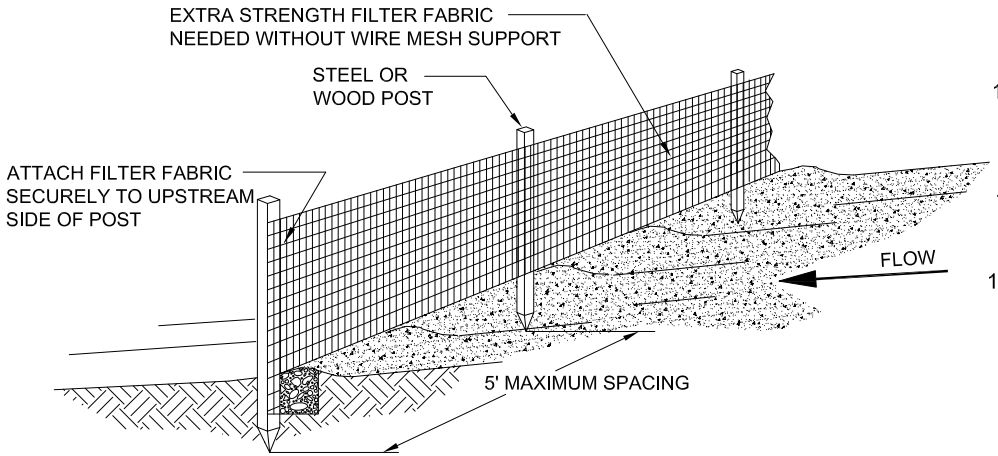

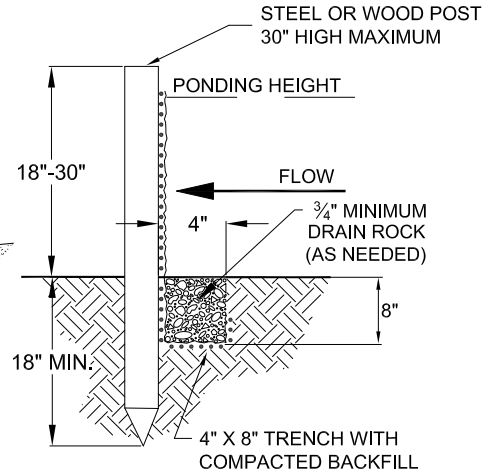

TRENCH DETAIL

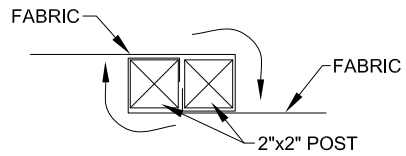

FABRIC JOINT DETAIL

INSTALLATION NOTES:

1. PLACE PARALLEL TO THE CONTOUR OF THE SLOPE AND AT LEAST 10 FEET BEYOND THE TOE OF THE SLOPE. INSTALL THE END OF THE FENCE UP SLOPE.

2. INSTALL THE SILT FENCE WITH THE FILTER FABRIC LOCATED ON THE UP-SLOPE SIDE OF THE EXCAVATED TRENCH AND THE SUPPORT POSTS ON THE DOWN-SLOPE SIDE OF THE TRENCH.

3. DRIVE THE SUPPORT POSTS AT LEAST 18 INCHES INTO THE GROUND, TIGHTLY STRETCHING THE FABRIC BETWEEN THE POSTS AS EACH IS DRIVEN INTO THE SOIL.

4. JOIN THE FENCES BY PLACING THE END POST OF THE SECOND FENCE INSIDE THE END POST OF THE FIRST FENCE. ROTATE BOTH POSTS AT LEAST 180° IN A CLOCKWISE DIRECTION TO CREATE A TIGHT SEAL WITH THE FABRIC MATERIAL. DRIVE BOTH POSTS ABOUT 18" INTO THE GROUND AND BURY FLAP. AT LEAST 12" OF THE FILTER FABRIC SHOULD EXTEND INTO THE TRENCH.

MAINTENANCE NOTES:

1. INSPECT WITHIN 24 HOURS OF A 0.5" RAINFALL EVENT AND AT LEAST ONCE EVERY SEVEN CALENDAR DAYS.

2. IF FENCE FABRIC TEARS, STARTS TO DECOMPOSE, OR IN ANY WAY BECOMES INEFFECTIVE, REPLACE THE AFFECTED PORTION IMMEDIATELY. REPAIRS SHALL MEET ALL INSTALLATION SPECIFICATIONS.

3. REMOVE DEPOSITED SEDIMENT WHEN IT IS CAUSING THE FILTER FABRIC TO BULGE OR WHEN IT REACHES ONE-HALF THE HEIGHT OF THE FENCE AT ITS LOWEST POINT. WHEN CONTRIBUTING DRAINAGE AREA HAS BEEN PERMANENTLY STABILIZED, REMOVE THE FENCE AND SEDIMENT DEPOSITS, GRADE THE SITE TO BLEND WITH THE SURROUNDING AREA, AND STABILIZE.

City of Elkhart

PUBLIC WORKS & UTILITIES
ENGINEERING DEPARTMENT

TITLE: SILT FENCE - PERIMETER PROTECTION

DRAWN BY: JJS	DATE: 02/11/14	SCALE: N.T.S.	FIGURE NO: 2-5

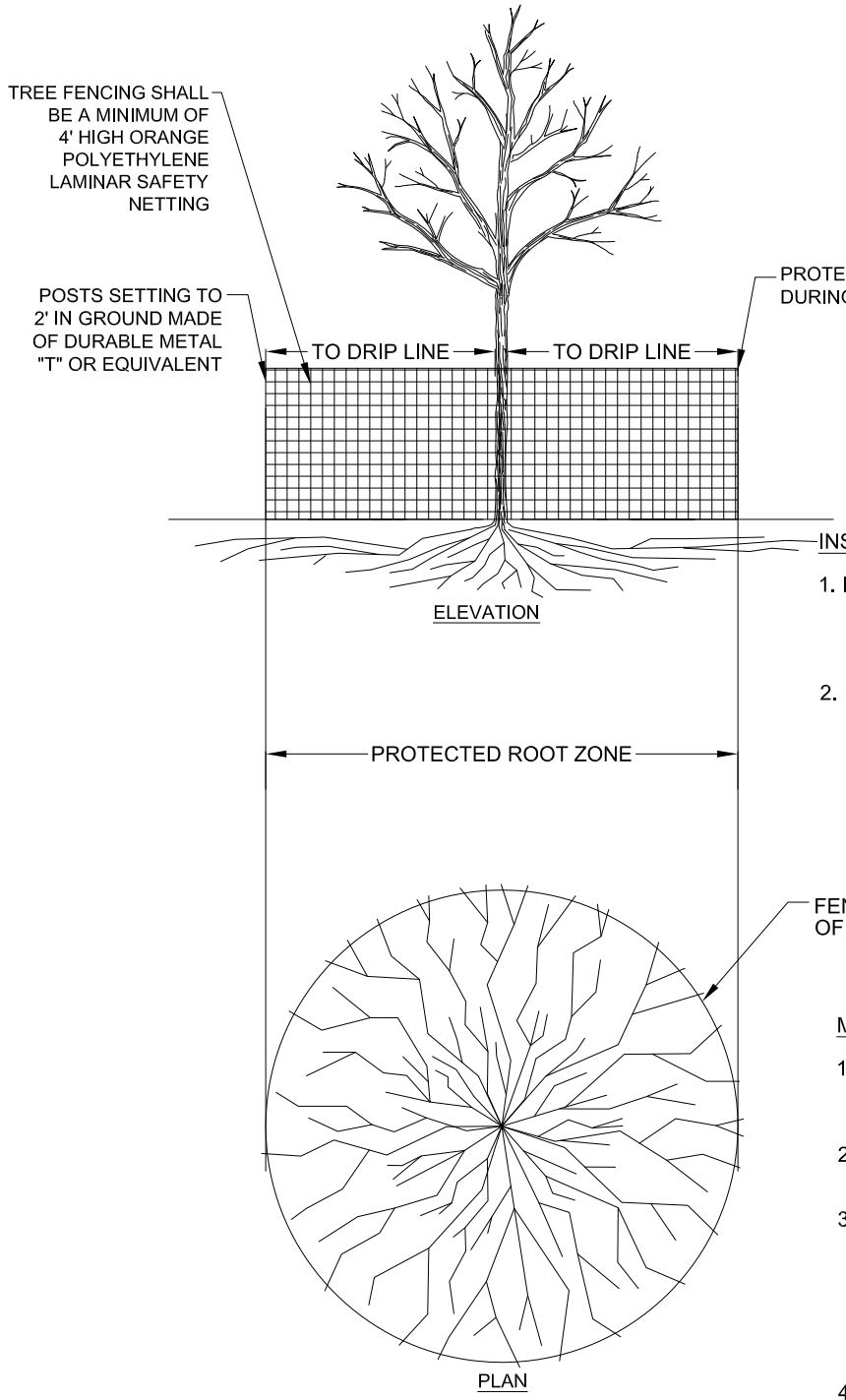

INSTALLATION NOTES:

1. IF SIDEWALK CONFLICTS WITH PLACEMENT OF FENCE, PLACE FENCE 1' OFF EDGE OF SIDEWALK.
2. IF CURB OR DRIVE APPROACH CONFLICTS WITH PLACEMENT OF FENCE, PLACE FENCE 2' - 3' OFF EDGE IF POSSIBLE.

MAINTENANCE NOTES:

1. INSPECT AT LEAST ONCE EVERY SEVEN CALENDAR DAYS.
2. REPAIR PERIMETER BARRIERS IF DAMAGED.
3. INSPECT FOR DAMAGE FROM CONSTRUCTION EQUIPMENT, ETC. REPAIR WOUNDS SIMPLY BY REMOVING DAMAGED BARK AND WOOD TISSUE. DO NOT USE TREE PAINT.
4. CABLE AND BRACE ANY TRUNK SPLITS, WEAK FORKS, AND LARGE LIMBS.

City of Elkhart

PUBLIC WORKS & UTILITIES
ENGINEERING DEPARTMENT

TITLE:
TREE PROTECTION

DRAWN BY: JJS	DATE: 02/11/14	SCALE: N.T.S.	FIGURE NO: 2-6

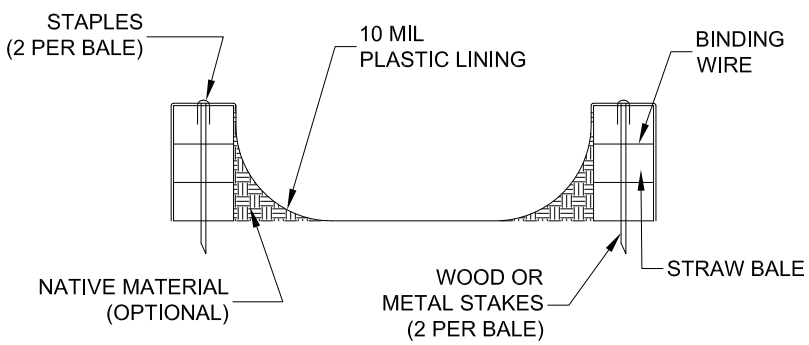

SECTION B-B

NO SCALE

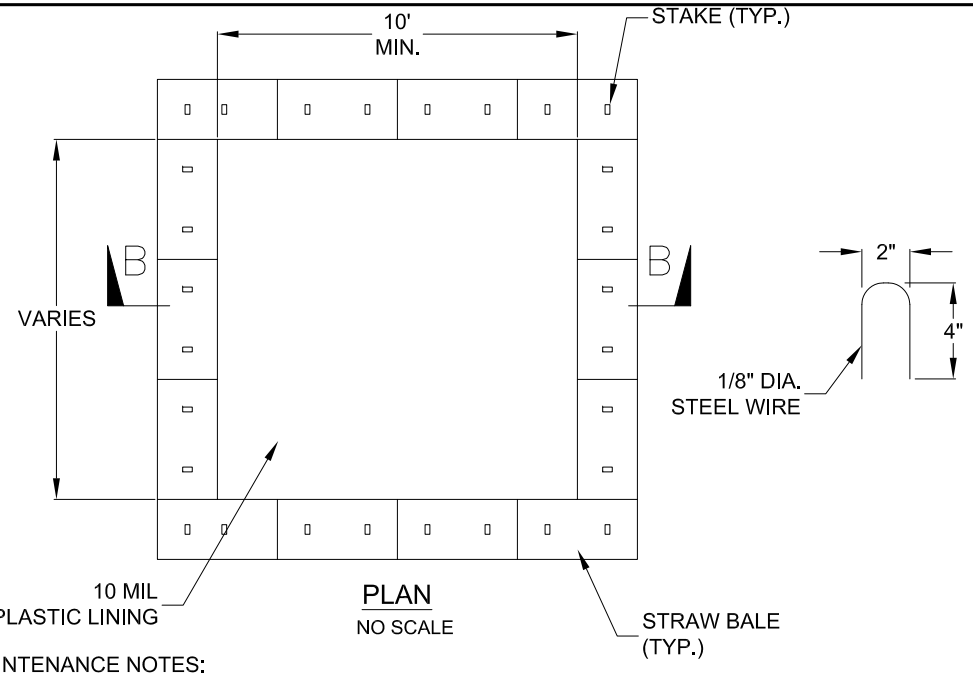

PLAN

NO SCALE

INSTALLATION NOTES:

1. IF A PREFABRICATED WASHOUT SYSTEM/CONTAINER IS USED, INSTALL AND LOCATE ACCORDING TO THE MANUFACTURER'S RECOMMENDATIONS, OTHERWISE DEPENDENT UPON THE TYPE OF SYSTEM, EITHER EXCAVATE A PIT OR INSTALL CONTAINMENT SYSTEM.

2. A BASE SHALL BE CONSTRUCTED AND PREPARED THAT IS FREE OF ROCKS AND OTHER DEBRIS THAT MAY CAUSE TEARS OR PUNCTURES IN THE POLYETHYLENE LINING.

3. INSTALL THE POLYETHYLENE LINING. FOR EXCAVATED SYSTEMS, THE LINING SHOULD EXTEND OVER THE ENTIRE EXCAVATION. THE LINING FOR BERMED SYSTEMS SHOULD BE INSTALLED OVER THE POOLING AREA WITH ENOUGH MATERIAL TO EXTEND THE LINING OVER THE BERM OR CONTAINMENT SYSTEM. THE LINING SHOULD BE SECURED WITH PINS, STAPLES, OR OTHER FASTENERS.

4. PLACE FLAGS, SAFETY FENCING, OR EQUIVALENT TO PROVIDE A BARRIER TO CONSTRUCTION EQUIPMENT AND OTHER TRAFFIC.

5. INSTALL CONCRETE WASHOUT SIGN WITHIN 30 FT. OF THE TEMPORARY CONCRETE WASHOUT FACILITY

6. ACTUAL LAYOUT DETERMINED IN FIELD

MAINTENANCE NOTES:

1. INSPECT DAILY AND AFTER EACH STORM EVENT.

2. INSPECT THE INTEGRITY OF THE OVERALL STRUCTURE. INSPECT SYSTEM FOR LEAKS, SPILLS AND TRACKING OF SOIL BY EQUIPMENT. INSPECT LINING FOR TEARS AND PUNCTURES. REPAIR OR REPLACE ALL FAILURES IMMEDIATELY.

3. STOP USE WHEN WASHOUT SYSTEM REACHES 50% CAPACITY AND UTILIZE ANOTHER WASHOUT SYSTEM. ONCE CONCRETE WASTES HARDEN, REMOVE AND DISPOSE OF MATERIAL.

4. CONCRETE WASHOUT SYSTEMS ARE DESIGNED TO PROMOTE EVAPORATION. HOWEVER, IF THE LIQUIDS DO NOT EVAPORATE AND THE SYSTEM IS NEAR CAPACITY IT MAY BE NECESSARY TO VACUUM OR REMOVE THE LIQUIDS AND DISPOSE OF THEM IN AN ACCEPTABLE METHOD.

5. UPON REMOVAL OF THE SOLIDS, INSPECT THE STRUCTURE. REPAIR THE STRUCTURE AS NEEDED OR CONSTRUCT A NEW SYSTEM.

6. DISPOSE OF ALL CONCRETE IN A LEGAL MANNER.

7. THE CONCRETE WASHOUT SYSTEM SHOULD BE REPAIRED OR ENLARGED AS NECESSARY TO MAINTAIN CAPACITY FOR CONCRETE WASTE.

8. WHEN CONCRETE WASHOUT SYSTEMS ARE NO LONGER REQUIRED, THE CONCRETE WASHOUT SYSTEMS SHALL BE CLOSED. DISPOSE OF ALL HARDENED MATERIALS USED TO CONSTRUCT THE SYSTEM.

9. HOLES, DEPRESSIONS AND OTHER LAND DISTURBANCES ASSOCIATED WITH THE SYSTEM SHOULD BE BACKFILLED, GRADED, AND STABILIZED.

City of Elkhart

PUBLIC WORKS & UTILITIES
ENGINEERING DEPARTMENT

TITLE: CONCRETE WASHOUT CONTAINMENT

DRAWN BY: JJS	DATE: 02/11/14	SCALE: N.T.S.	FIGURE NO: 2-7

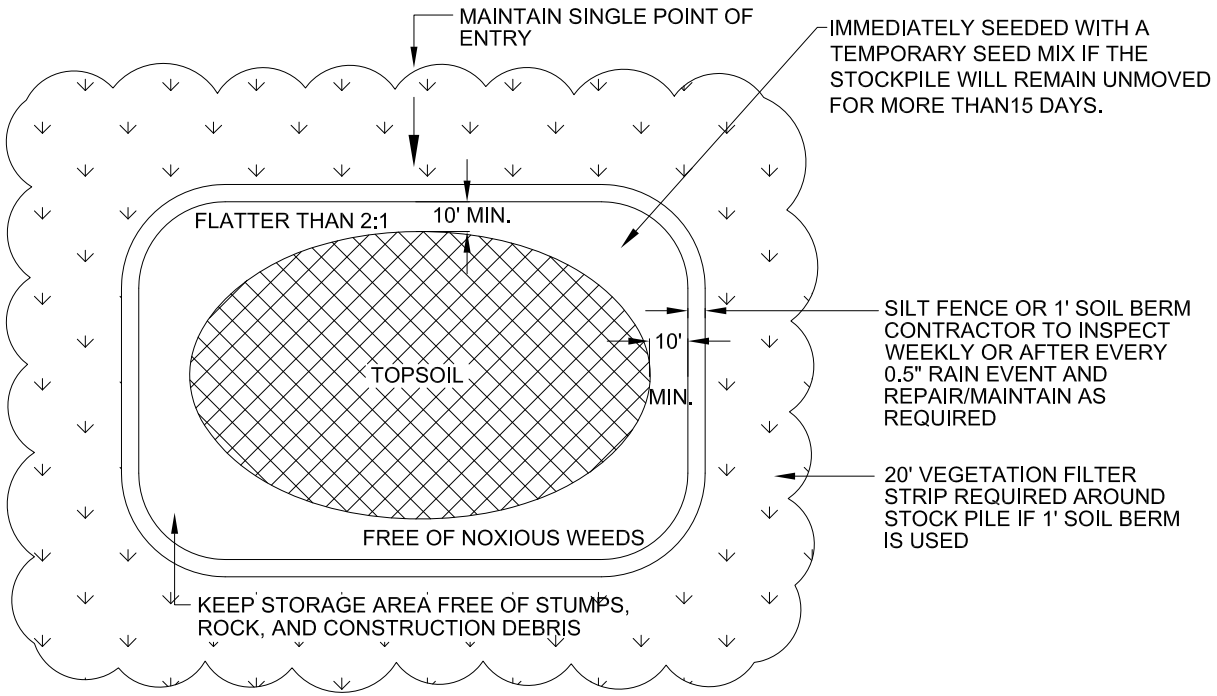

City of Elkhart

PUBLIC WORKS & UTILITIES
ENGINEERING DEPARTMENT

TITLE: TOPSOIL STOCKPILE

DRAWN BY: JJS	DATE: 02/11/14	SCALE: N.T.S.	FIGURE NO: 2-8

NOTES:
1. THRUST BLOCKS SHALL BE USED WHEN JOINT RESTRAINIT IS NOT USED. 2. JOINT RESTRAINT SHALL BE IN ACCORDANCE WITH THE MANUFACTURER'S AND DIPRA'S RECOMMENDATIONS.

BLOCKING FOR PLUGS, VALVES & BENDS					
PIPE SIZE	OUTSIDE FACE AREA (SQ.FT.)				
	PLUG/VALVE	90°	45°	22 1/2°	11 1/4 °
4"	2	2	1	1	1
6"	3	4	2	1	1
8"	5	6	4	2	1
10"	7	9	5	3	2
12"	10	13	7	4	2
16"	17	23	13	7	4
18"	21	29	16	8	4
24"	37	52	28	15	8
30"	57	80	44	23	12
36"	82	116	63	32	16

BLOCKING FOR TEES & WYES	
SIZE OF BRANCH	OUTSIDE FACE AREA (SQ. FT)
6" OR LESS	2
8"	3
10"	7
12"	10
16"	17
18"	21
24"	37
30"	57
36"	82

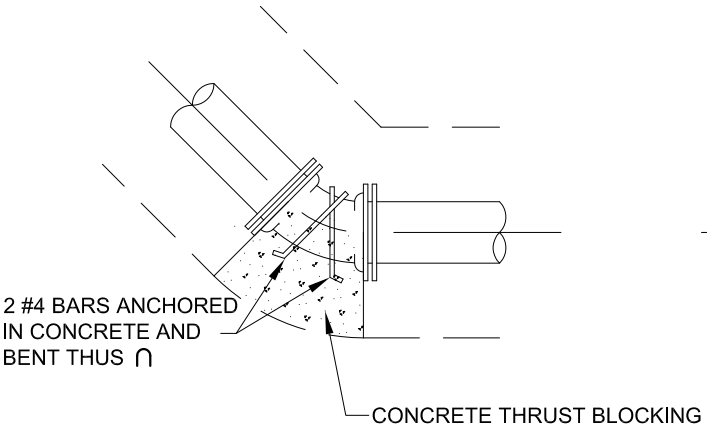

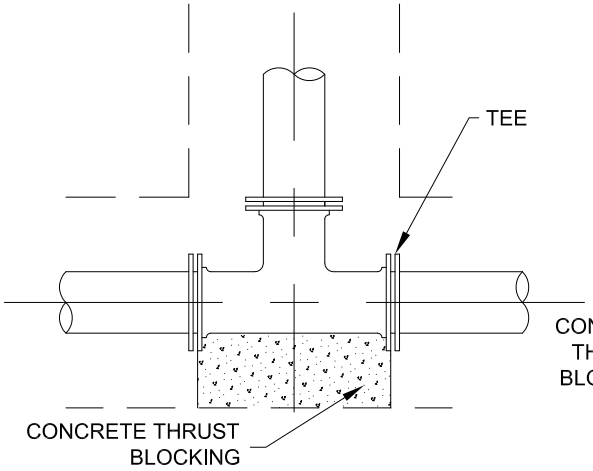

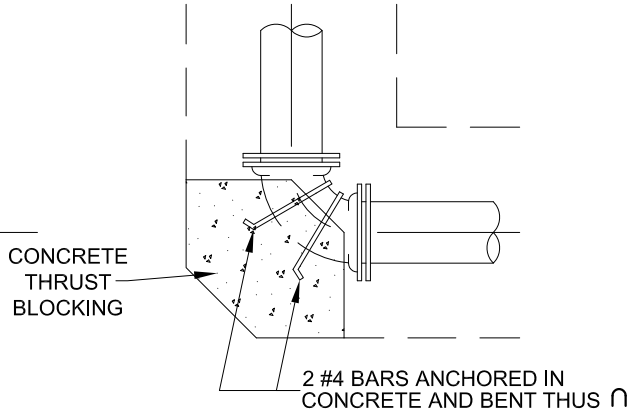

CONCRETE TO BE PLACED BETWEEN FIRM EARTH OF TRENCH AND PIPE AT ALL TEES, BENDS AND CAPS.

City of Elkhart

PUBLIC WORKS & UTILITIES
ENGINEERING DEPARTMENT

TITLE:

TYPICAL THRUST BLOCKING INSTALLATION

DRAWN BY: JJS	DATE: 01/26/16	SCALE: N.T.S.	FIGURE NO: 4-1

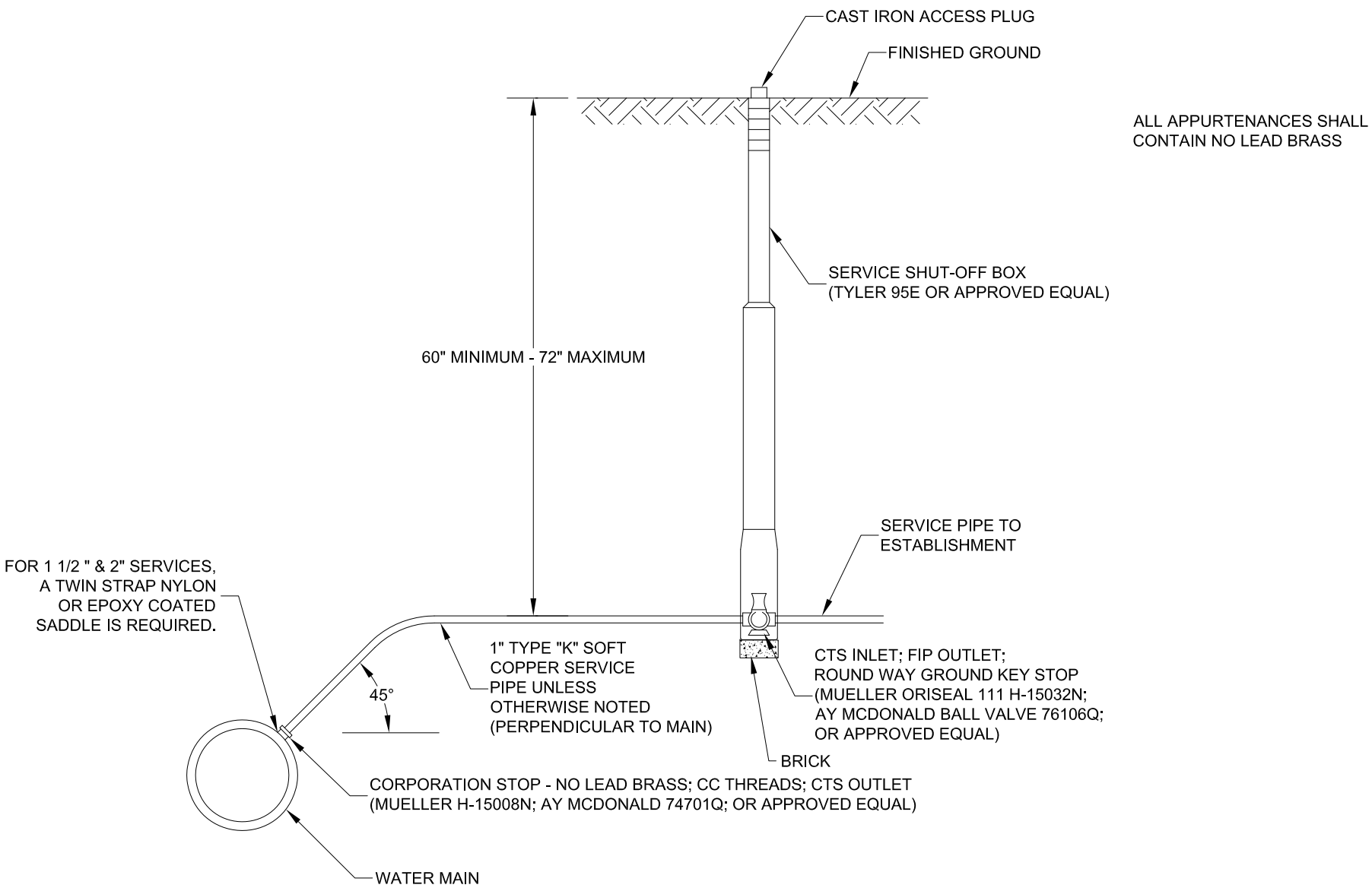

City of Elkhart

PUBLIC WORKS & UTILITIES
ENGINEERING DEPARTMENT

TITLE: TYPICAL WATER SERVICE CONNECTION

DRAWN BY: JJS	DATE: 01/26/16	SCALE: N.T.S.	FIGURE NO: 4-2

NOTES:

1. FIRE HYDRANTS SHALL BE EAST JORDAN IRON WORKS 5BR250; CLOW MEDALLION; MUELLER SUPER-CENTURION; OR DARLING B-84-B.

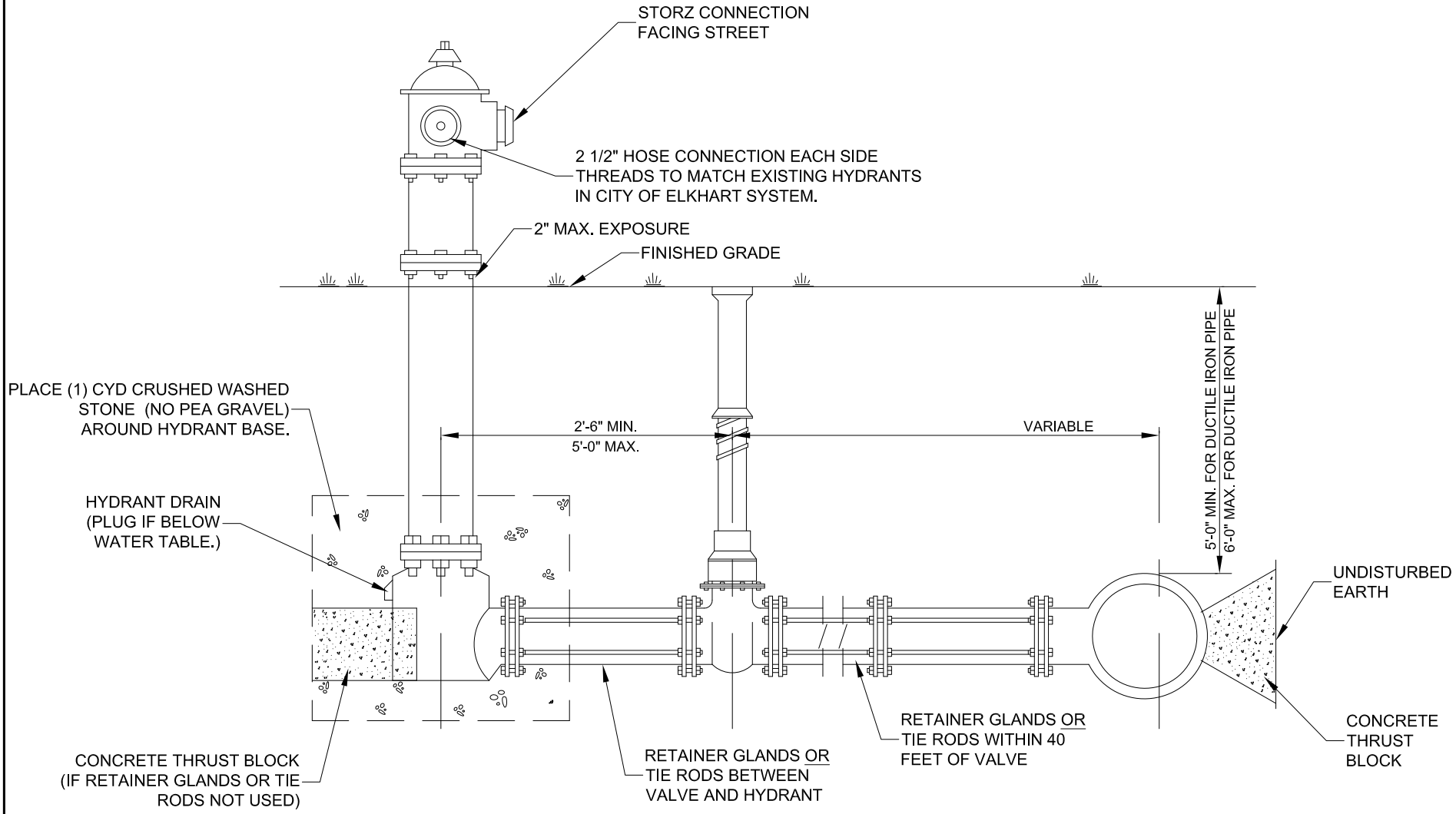

City of Elkhart

PUBLIC WORKS & UTILITIES
ENGINEERING DEPARTMENT

TITLE: TYPICAL HYDRANT ASSEMBLY

DRAWN BY: JJS	DATE: 02/11/14	SCALE: N.T.S.	FIGURE NO: 4-3

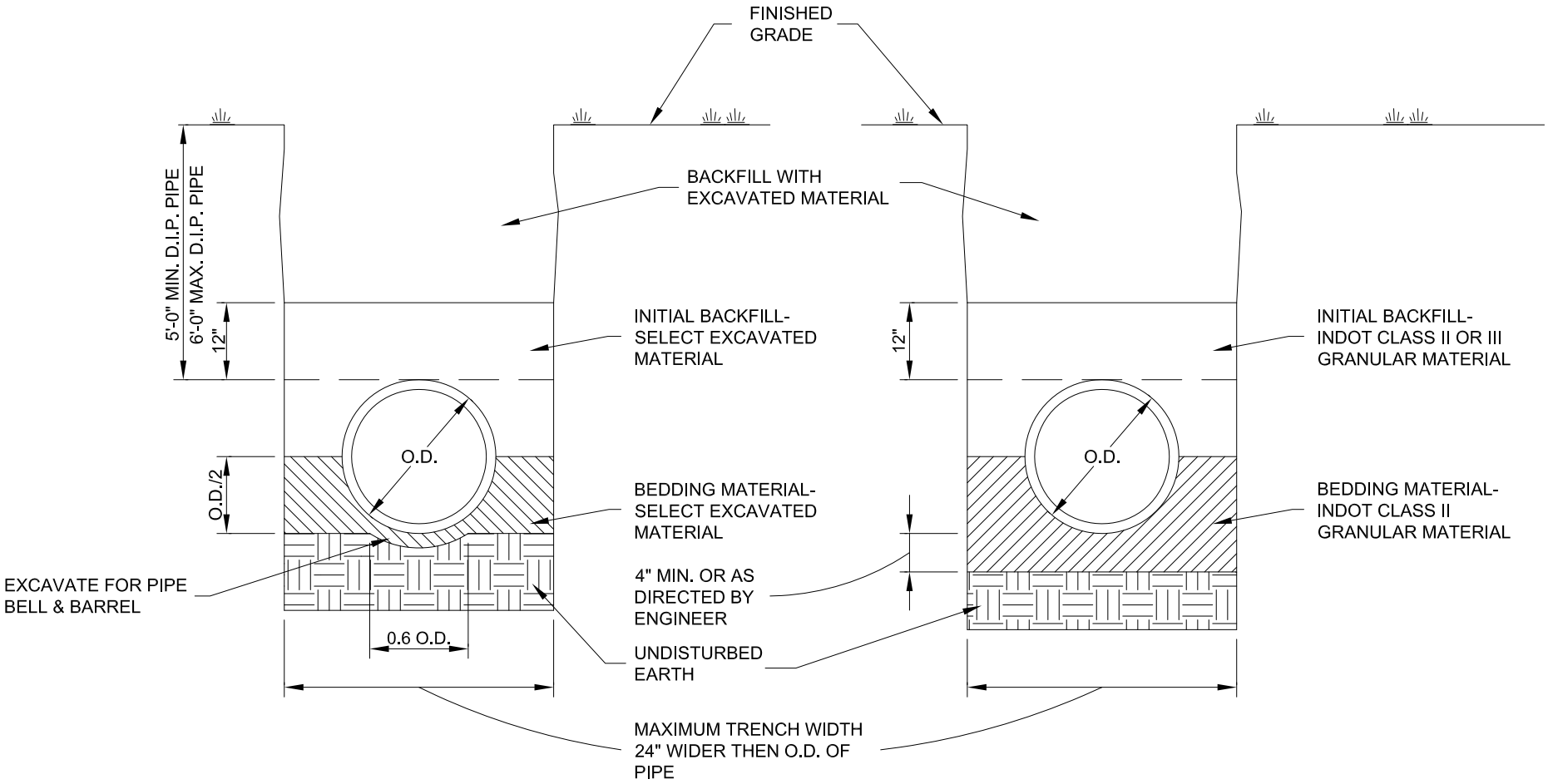

TRENCH DETAIL
IN SUITABLE SOIL

TRENCH DETAIL
IN UNSUITABLE SOIL

City of Elkhart

PUBLIC WORKS & UTILITIES
ENGINEERING DEPARTMENT

TITLE: TRENCH DETAIL FOR WATER MAIN

DRAWN BY: JJS	DATE: 02/11/14	SCALE: N.T.S.	FIGURE NO: 4-4

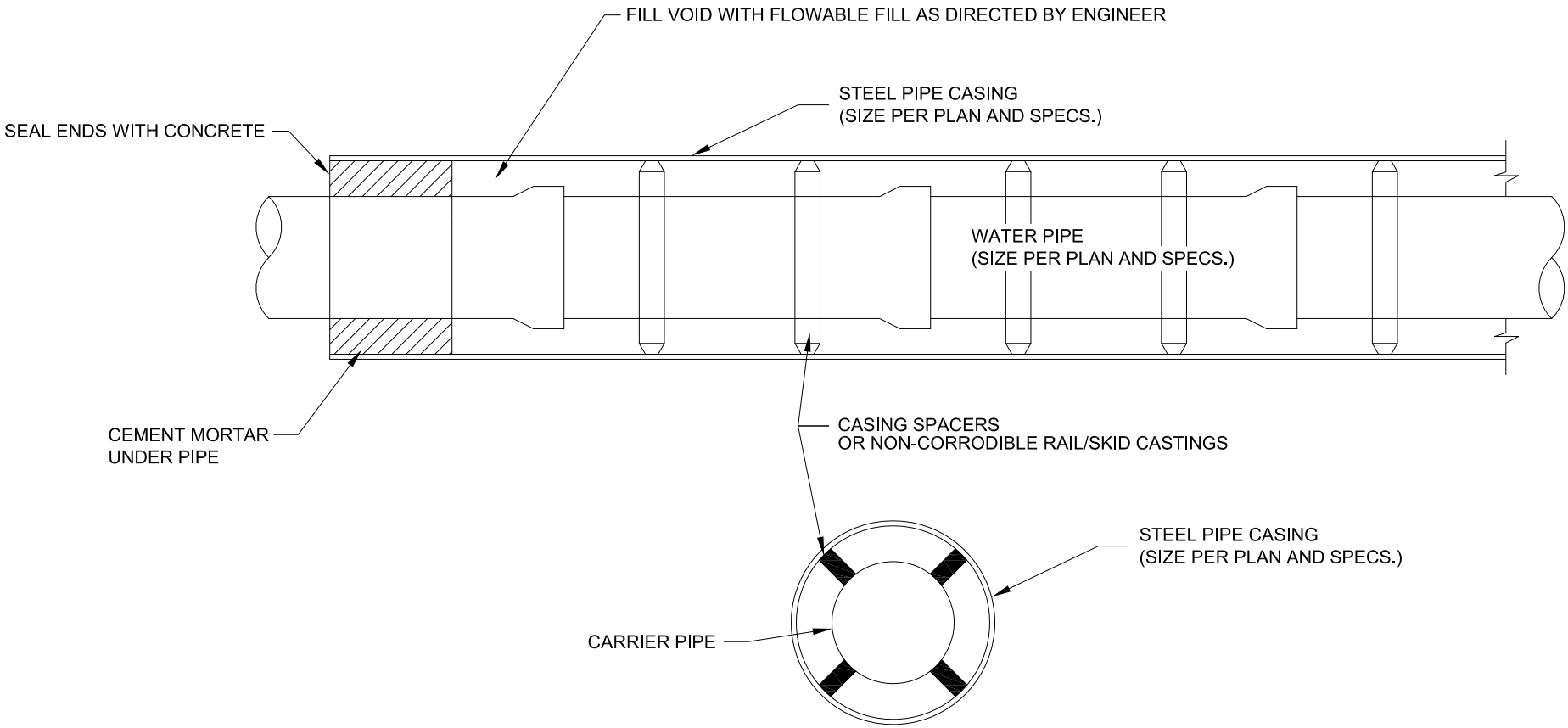

SECTION

City of Elkhart PUBLIC WORKS & UTILITIES ENGINEERING DEPARTMENT	TITLE: TYPICAL WATER CASING DETAIL			
	DRAWN BY: JJS	DATE: 03/07/13	SCALE: N.T.S.	FIGURE NO: 4-5

BILL OF MATERIAL
1. SERVICE LINE: TYPE K COPPER OR GALV.
2. VALVE: RECOMMEND BALL VALVE
3. METER YOKE
4. HOUSE PIPING

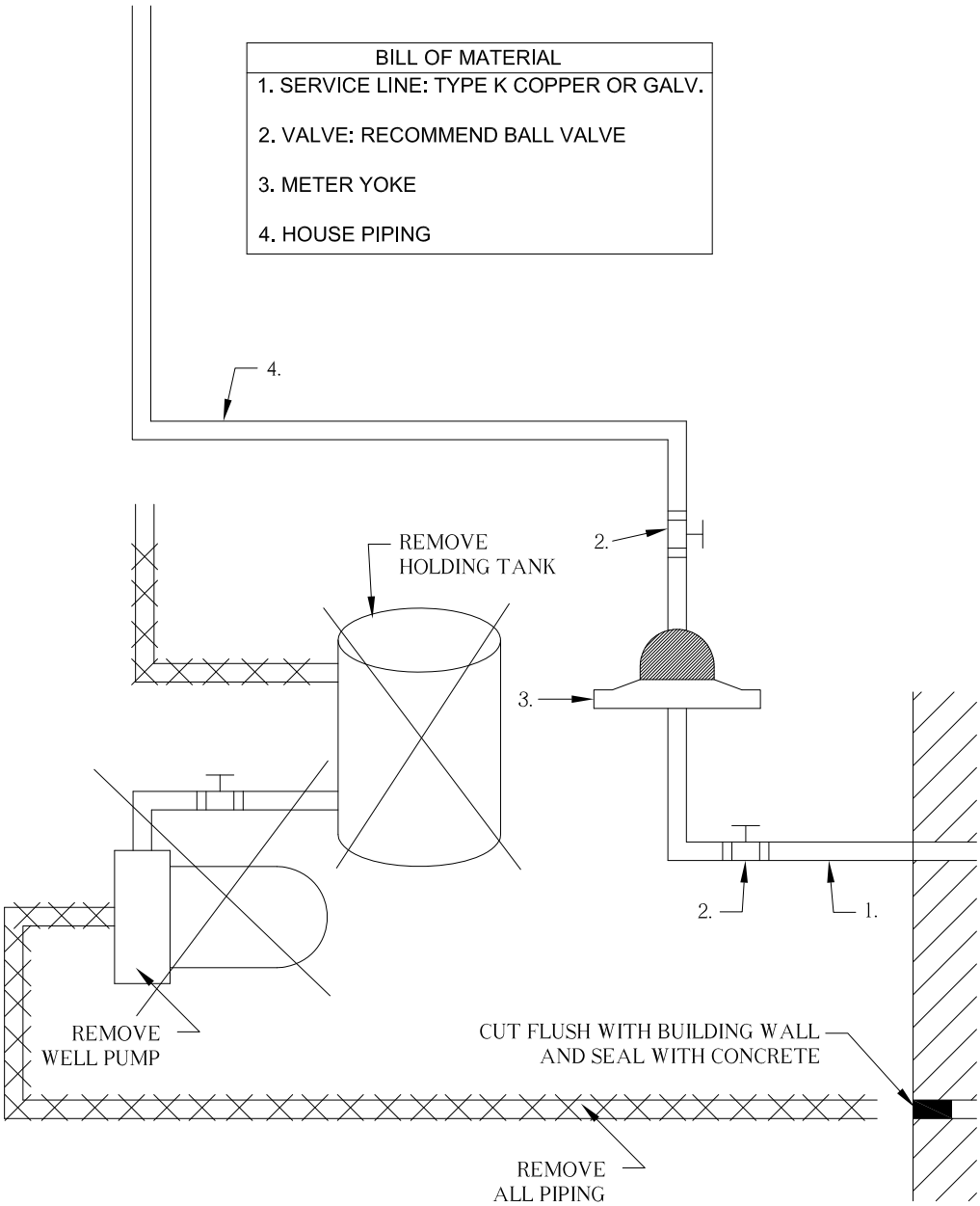

NOTES:
A. YOKE MUST SET HORIZONTALLY
B. NO PLASTIC PIPE CONNECTED TO YOKE
C. MUST HAVE 6 TO 8 INCHES OF COPPER OR GALV. PIPE ON BOTH SIDES OF YOKE
D. YOKE CANNOT BE PLACED IN A CRAWL SPACE
E. ABSOLUTLEY NO PITS
G. CITY WATER LINE AND WELL LINE CANNOT BE INTERCONNECTED IN ANY WAY

ONE OF THE FOLLOWING THREE OPTIONS SHALL BE CHOSEN WHEN CONVERTING FROM WELL TO CITY WATER:

1. WHOLLY ABANDON AND CONCRETE EXISTING WELL.
2. REMOVE ALL PLUMBING/PIPING FROM THE WELL WITHIN THE BUILDING, CUT THE PIPING FLUSH TO THE BUILDING WALL AND SEAL WITH CONCRETE (ILLUSTRATED ABOVE).
3. CUT PIPING OFF PUMP AND BETWEEN HOLDING TANK AND SERVICE LINE AND INSTALL A BACKFLOW PREVENTER BEFORE THE METER - THIS METHOD MUST BE APPROVED BY CITY ENGINEER.

City of Elkhart

PUBLIC WORKS & UTILITIES
ENGINEERING DEPARTMENT

TITLE:
5/8"-1" DOMESTIC METER - CONVERTING FROM WELL

DRAWN BY: JJS	DATE: 02/11/14	SCALE: N.T.S.	FIGURE NO:4-6

BILL OF MATERIAL
1. TYPE K COPPER OR GALV.
2. VALVE: LOCKING BALL VALVE
3. LOC-PAC: INSTALL ON PRESSURE SIDE
4. IRON FLANGE
5. BACKFLOW PREVENTER: IF APPLICABLE
6. BY-PASS
7. TEST PORT WITH BALL VALVE

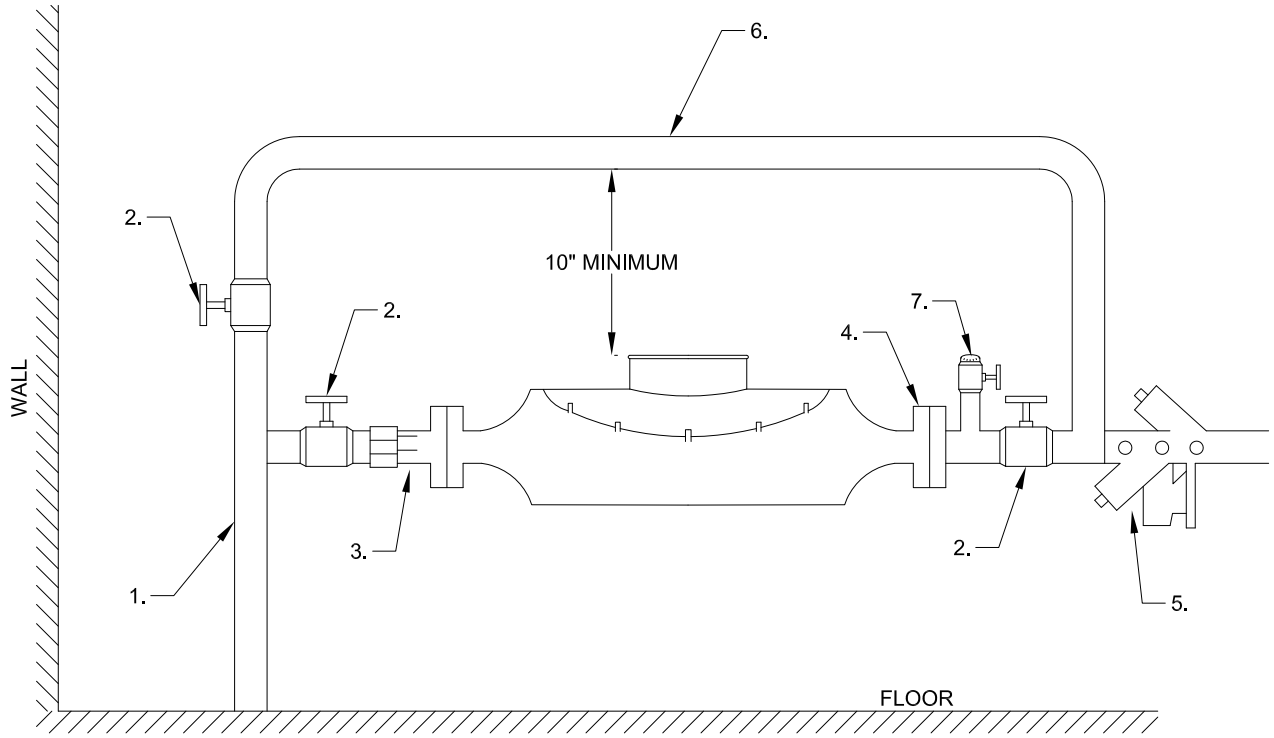

NOTE:

A. BACKFLOW PREVENTER CANNOT BE BYPASSED

B. METER MUST BE MINIMUM 36" AND MAXIMUM 48" FROM FLOOR AND 12" FROM WALL

C. NO PLASTIC INTO SETTING

D. TEST PORT UP TO 2" SHOULD SIZE TO METER; 3" AND UP SIZE TO 3"

E. BYPASS MUST BE A MINIMUM OF 10" ABOVE TOP OF METER.

City of Elkhart

PUBLIC WORKS & UTILITIES
ENGINEERING DEPARTMENT

TITLE:
1 1/2" - 2" METER SETTING

DRAWN BY: JJS	DATE: 05/20/14	SCALE: N.T.S.	FIGURE NO:4-7

BILL OF MATERIAL
1. SERVICE LINE: TYPE K COPPER OR GALV.
2. VALVE: RECOMMEND BALL VALVE
3. METER YOKE
4. HOUSE PIPING: COPPER OR GALV.

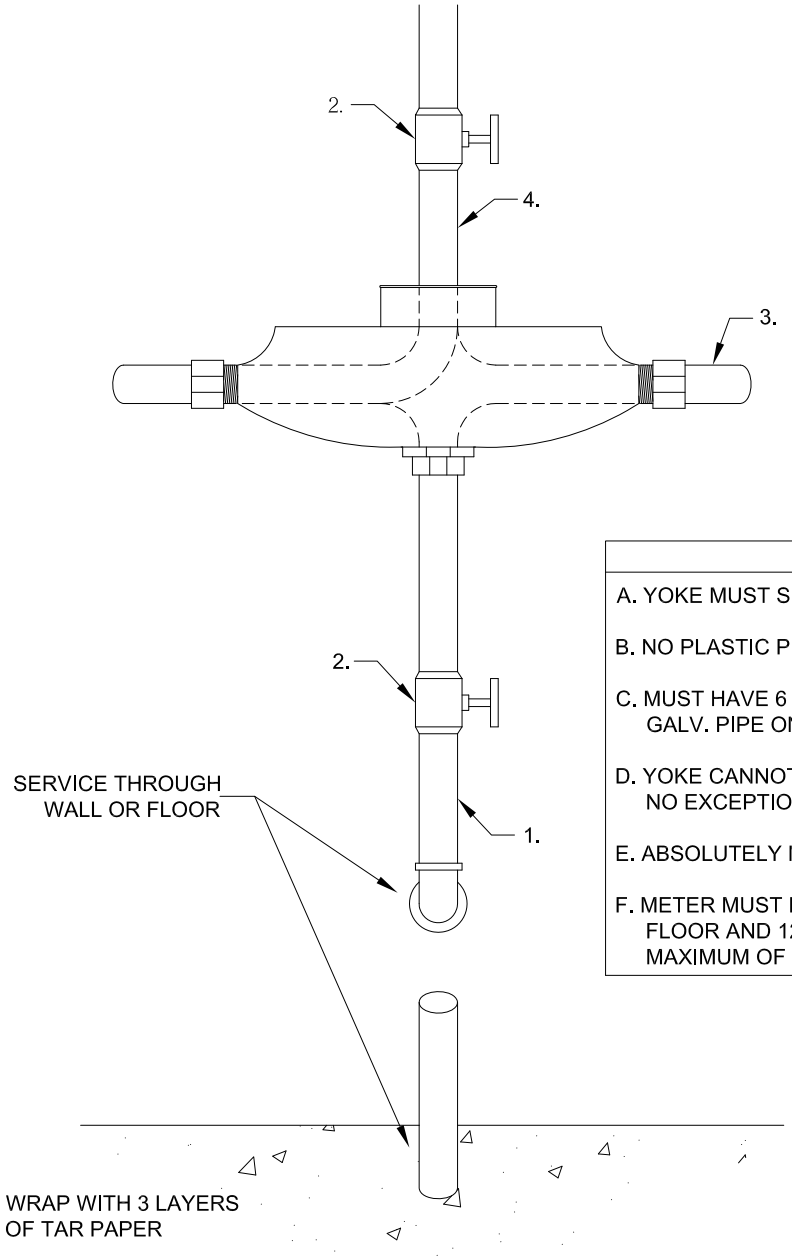

NOTES:
A. YOKE MUST SET HORIZONTALLY
B. NO PLASTIC PIPE CONNECTED TO YOKE
C. MUST HAVE 6 TO 8 INCHES OF COPPER OR GALV. PIPE ON BOTH SIDES OF YOKE
D. YOKE CANNOT BE PLACED IN A CRAWL SPACE. NO EXCEPTIONS
E. ABSOLUTELY NO PITS
F. METER MUST BE MINIMUM OF 36" FROM THE FLOOR AND 12" FROM THE WALL AND MAXIMUM OF 48" TO THE TOP OF THE METER.

City of Elkhart

PUBLIC WORKS & UTILITIES
ENGINEERING DEPARTMENT

TITLE:
5/8"-1" IRRIGATION METER

DRAWN BY: JJS	DATE: 05/20/14	SCALE: N.T.S.	FIGURE NO: 4-8

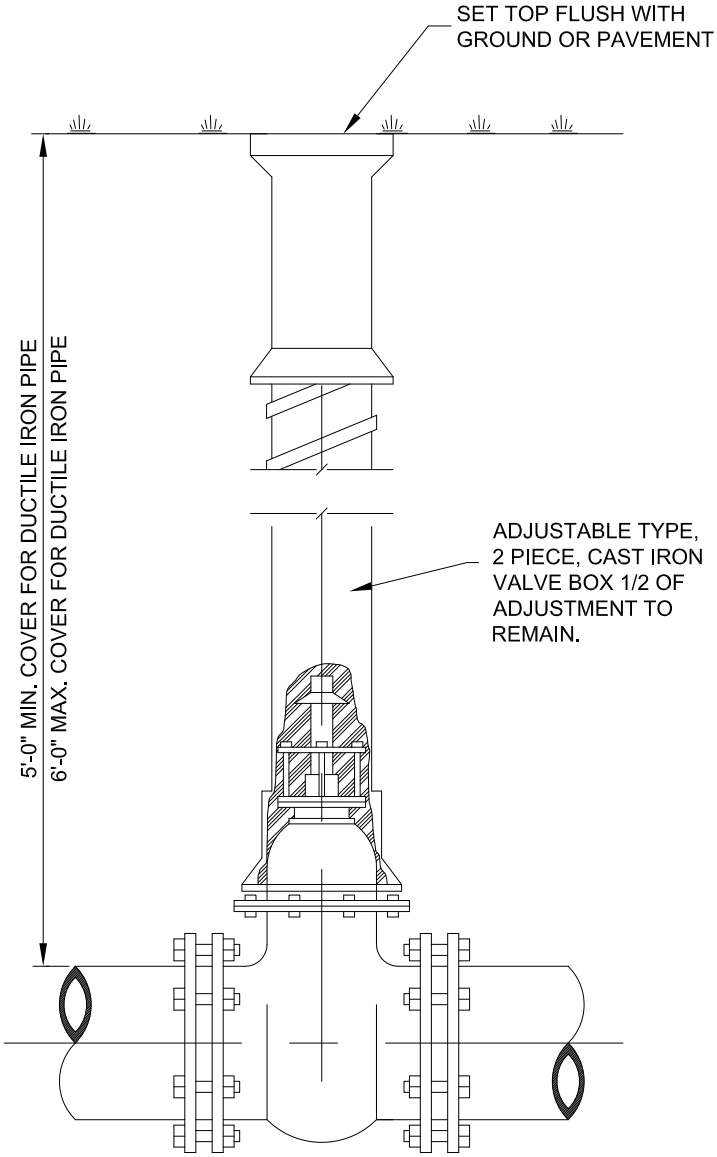

NOTES:

1. GATE VALVES SHALL BE MANUFACTURED BY CLOW, MUELLER, OR APPROVED EQUAL.

2. VALVE BOX SHALL BE MANUFACTURED BY TYLER PIPE INDUSTRIES MODEL 664-S OR APPROVED EQUAL.

City of Elkhart

PUBLIC WORKS & UTILITIES
ENGINEERING DEPARTMENT

TITLE: TYPICAL GATE VALVE AND BOX

DRAWN BY: JJS	DATE: 02/11/14	SCALE: N.T.S.	FIGURE NO: 4-9

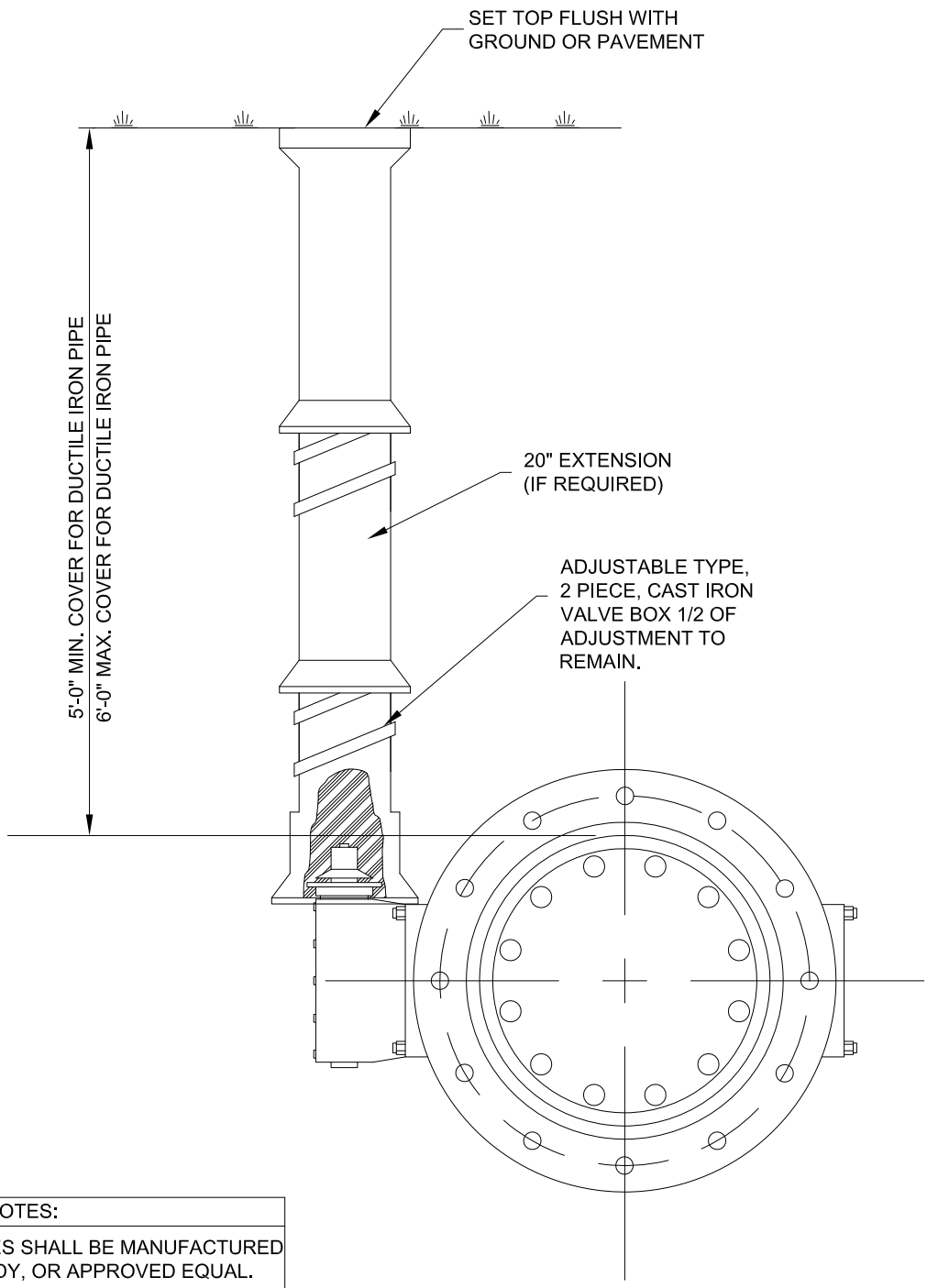

NOTES:

1. BUTTERFLY VALVES SHALL BE MANUFACTURED BY CLOW, KENNEDY, OR APPROVED EQUAL.

2. VALVE BOX SHALL BE MANUFACTURED BY TYLER PIPE INDUSTRIES MODEL 664-S OR APPROVED EQUAL.

City of Elkhart

PUBLIC WORKS & UTILITIES
ENGINEERING DEPARTMENT

TITLE:
TYPICAL BUTTERFLY VALVE AND BOX

DRAWN BY: JJS	DATE: 02/11/14	SCALE: N.T.S.	FIGURE NO: 4-10

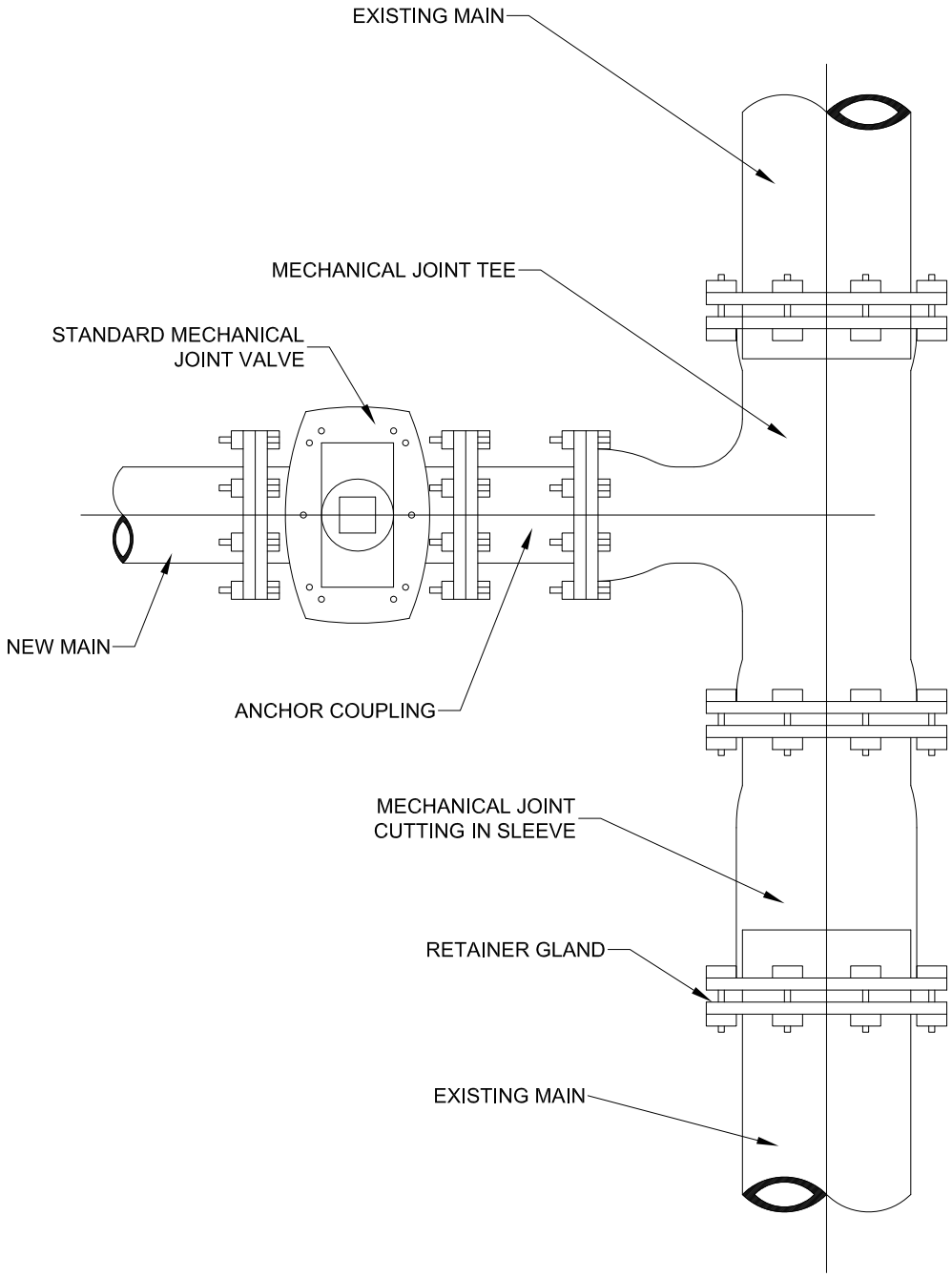

City of Elkhart

PUBLIC WORKS & UTILITIES
ENGINEERING DEPARTMENT

TITLE:
DRY TAP METHOD

DRAWN BY: JJS	DATE: 02/11/14	SCALE: N.T.S.	FIGURE NO: 4-11

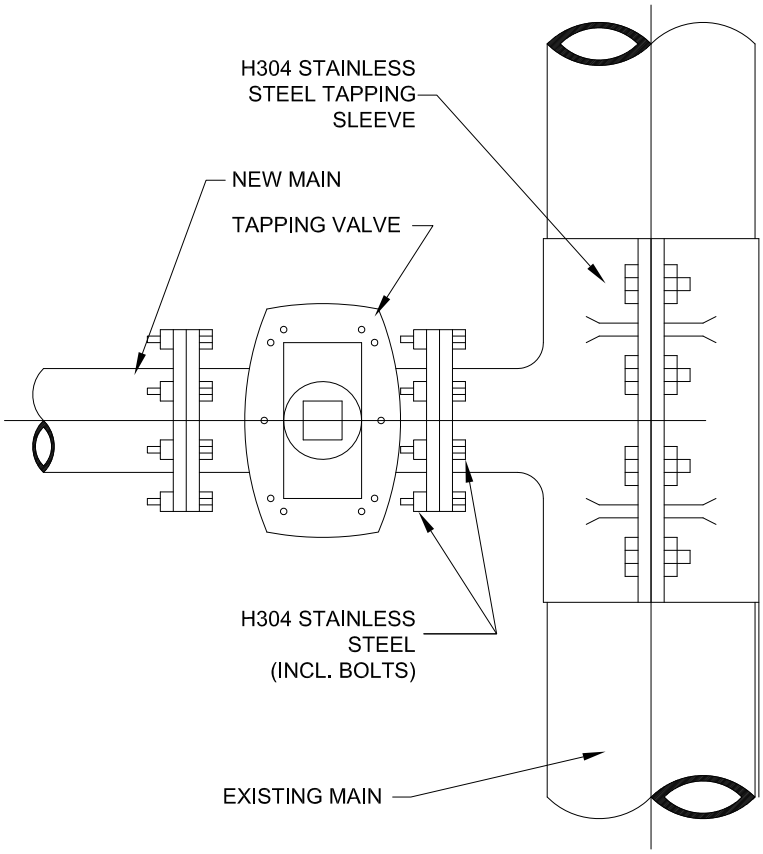

TAP MADE UNDER PRESSURE (WET TAP)
CONNECTING NEW MAIN TO EXISTING MAIN

NOTES:

1. TAPPING VALVES SHALL BE CLOW, MUELLER, OR APPROVED EQUAL.

2. THE PHYSICAL TAPPING OF THE EXISTING WATER MAIN SHALL BE PERFORMED BY THE CITY'S UTILITY DISTRIBUTION DEPARTMENT. THE CONTRACTOR SHALL REQUEST, IN WRITING, THE TAPPING AT LEAST 48 HOURS IN ADVANCE. ALL EXCAVATION AND PREPARATION WORK SHALL BE PERFORMED BY THE CONTRACTOR, AND THE CONTRACTOR SHALL PROVIDE ALL MATERIALS. THE UTILITY WILL ONLY PERFORM THE PHYSICAL TAP.

City of Elkhart

PUBLIC WORKS & UTILITIES
ENGINEERING DEPARTMENT

TITLE: TAPPING SLEEVE & VALVE

DRAWN BY: JJS	DATE: 02/11/14	SCALE: N.T.S.	FIGURE NO: 4-12

BILL OF MATERIAL
1. SERVICE LINE: TYPE K COPPER OR GALV.
2. VALVE: RECOMMEND BALL VALVE
3. METER YOKE
4. HOUSE PIPING: COPPER OR GALV.

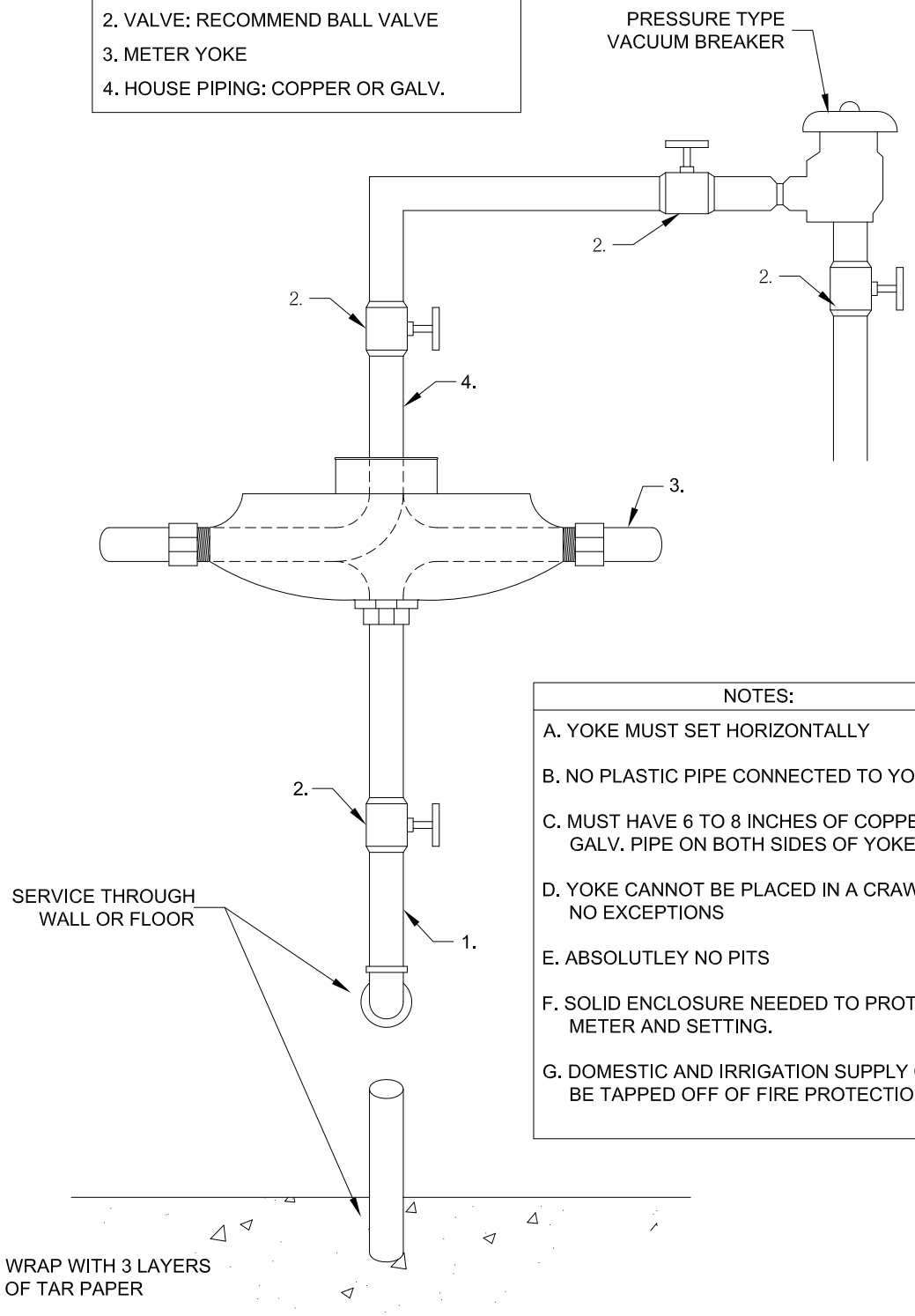

NOTES:

A. YOKE MUST SET HORIZONTALLY

B. NO PLASTIC PIPE CONNECTED TO YOKE

C. MUST HAVE 6 TO 8 INCHES OF COPPER OR GALV. PIPE ON BOTH SIDES OF YOKE

D. YOKE CANNOT BE PLACED IN A CRAWL SPACE. NO EXCEPTIONS

E. ABSOLUTLEY NO PITS

F. SOLID ENCLOSURE NEEDED TO PROTECT METER AND SETTING.

G. DOMESTIC AND IRRIGATION SUPPLY CANNOT BE TAPPED OFF OF FIRE PROTECTION LINE.

City of Elkhart

PUBLIC WORKS & UTILITIES
ENGINEERING DEPARTMENT

TITLE:
5/8"-1" IRRIGATION METER

DRAWN BY: JJS	DATE: 05/20/14	SCALE: N.T.S.	FIGURE NO: 4-13

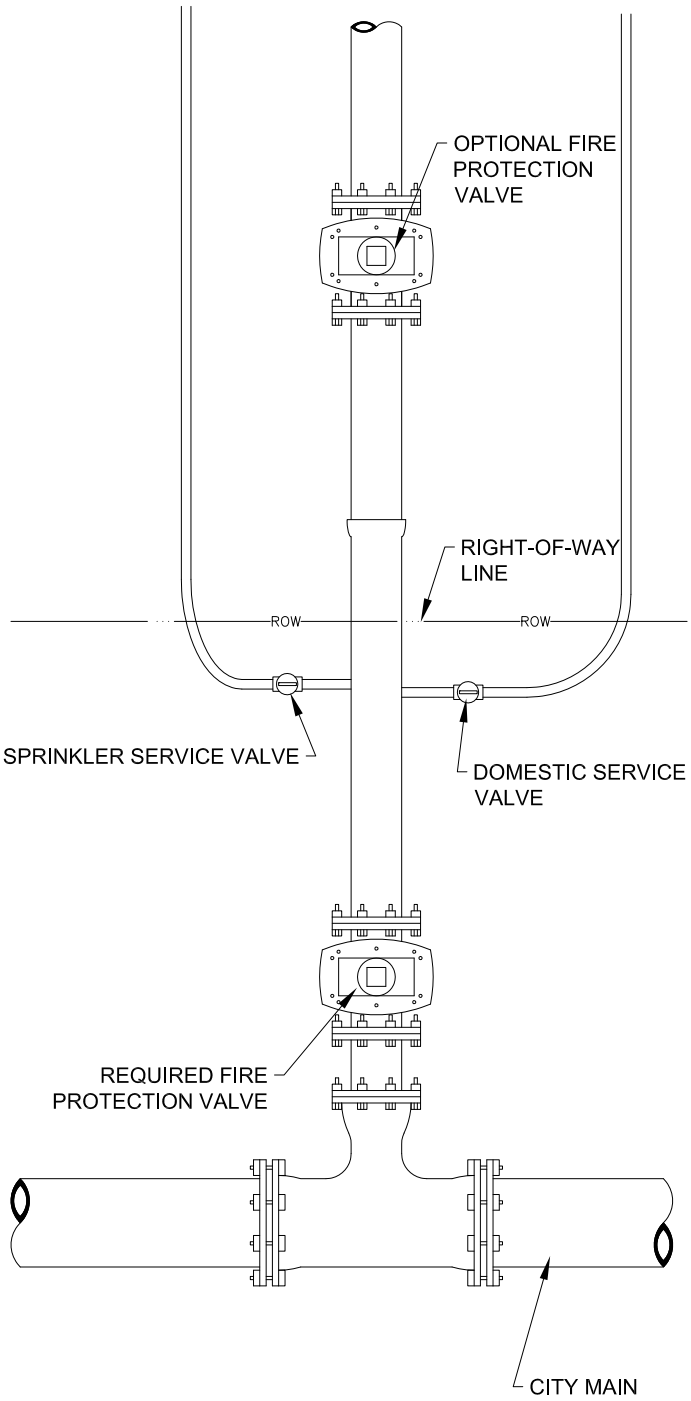

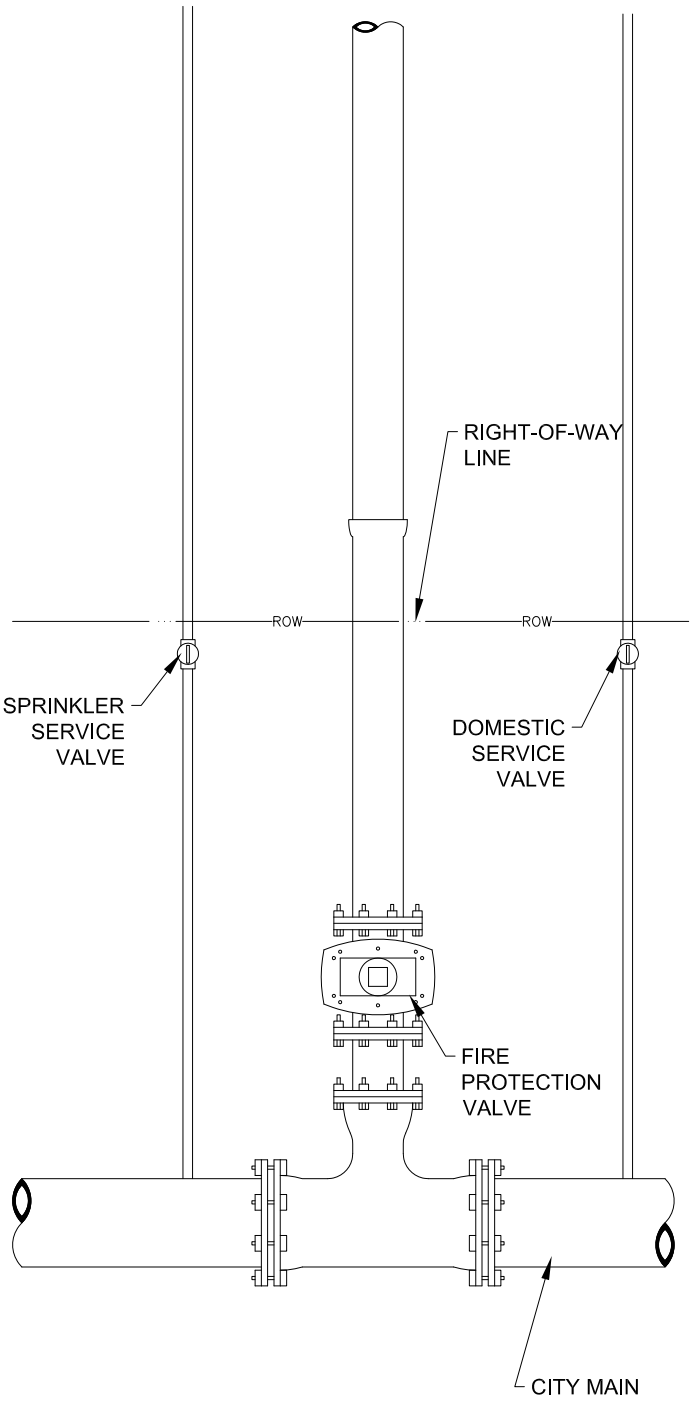

NOTE:
ANY COMBINATION THEREOF SO LONG AS THERE IS AN ISOLATION VALVE FOR EACH LINE WITHIN THE RIGHT-OF-WAY.

City of Elkhart

PUBLIC WORKS & UTILITIES
ENGINEERING DEPARTMENT

TITLE:
DOMESTIC/FIRE/IRRIGATION SERVICES

DRAWN BY: JJS	DATE: 09/11/15	SCALE: N.T.S.	FIGURE NO: 4-14

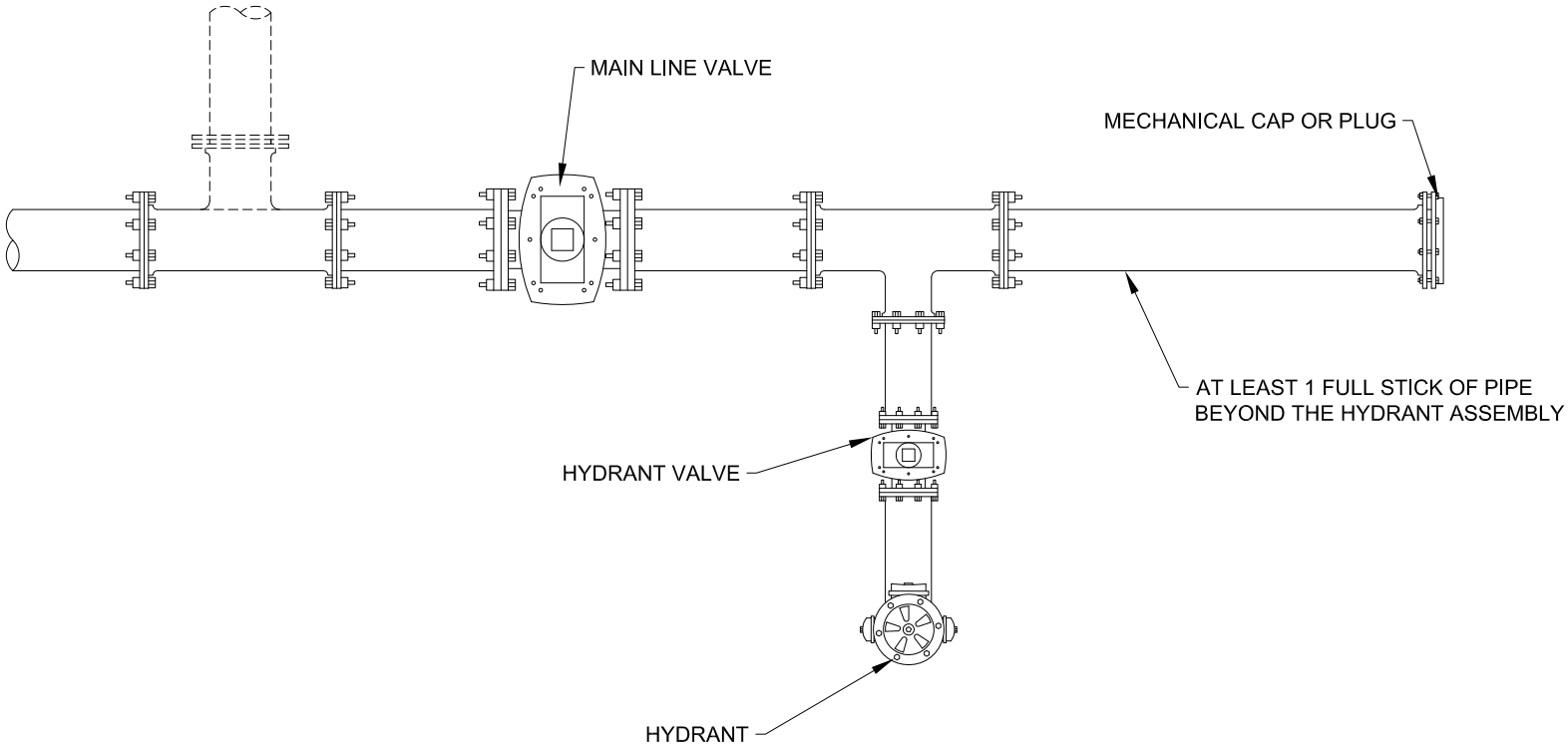

City of Elkhart

PUBLIC WORKS & UTILITIES
ENGINEERING DEPARTMENT

TITLE:

TYPICAL WATER MAIN DEAD END

DRAWN BY: JJS	DATE: 01/26/16	SCALE: N.T.S.	FIGURE NO: 4-15

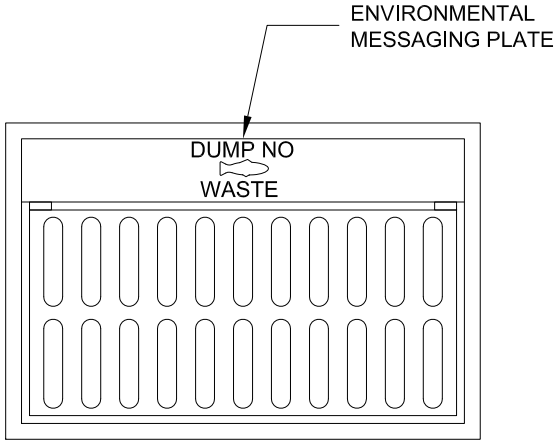

PLAN

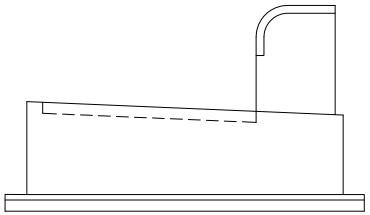

SECTION

PREAPPROVED CASTINGS
NEENAH FOUNDRY R-3010
EJIW 7010 W/ T1 M1

City of Elkhart

PUBLIC WORKS & UTILITIES
ENGINEERING DEPARTMENT

TITLE: TYPICAL STORM SEWER CURB CASTING DETAIL

DRAWN BY: JJS	DATE: 02/27/13	SCALE: N.T.S.	DRAWING NO. 5-1

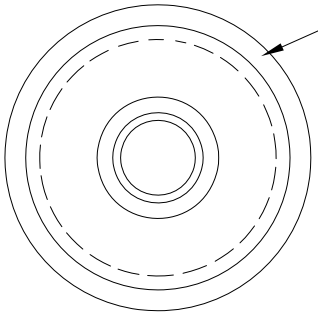

PLAN

IN GRASS, AN OPEN GRATE CASTING SHALL BE NEENAH R-2560-E WITH A 7" BEEHIVE GRATE.

IN PAVEMENT, AN OPEN GRATE CASTING SHALL BE NEENAH R-2502 WITH A TYPE "D" GRATE.

ALL OTHER CASTINGS SHALL BE NEENAH R-1772 WITH A TYPE "B" LID.

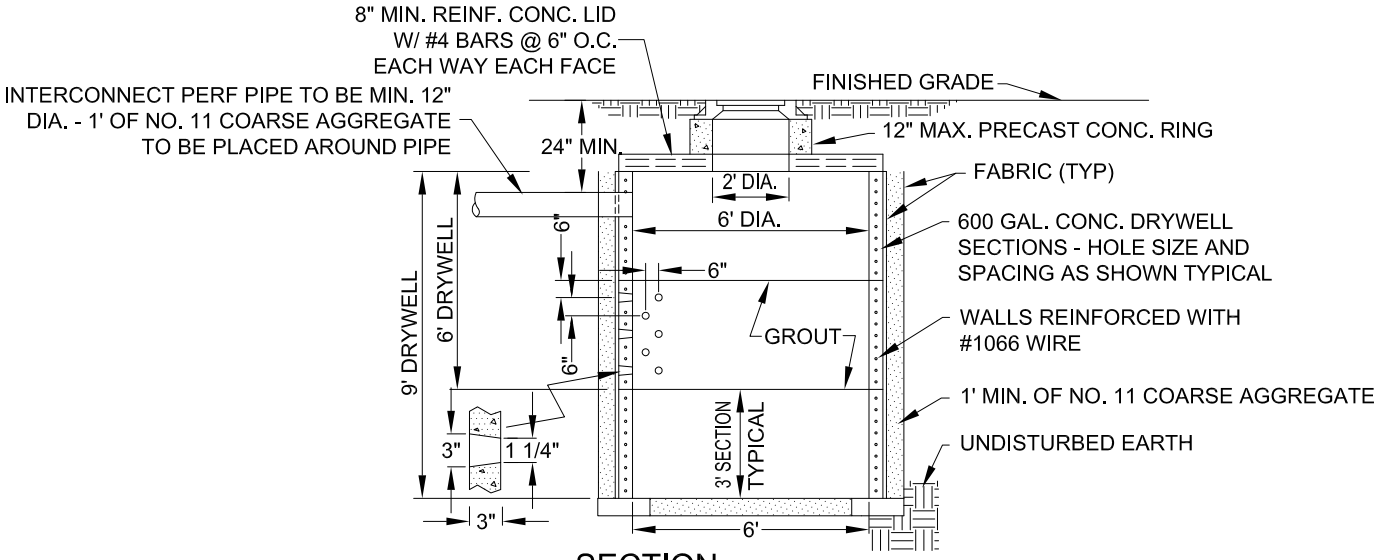

SECTION

NOTE:

1. A LAYER OF SUPAC 4-P BY PHILLIPS FABRICS, PROPEX 4545 BY AMOCO FABRICS, FILBRETEX 150 BY CROWN ZELLERBACH, TREVIRA SUNBOND 11-50 BY HOECHST FIBRES INDUSTRIES OR APPROVED EQUAL SHALL BE PLACED BETWEEN THE DRYWELL AND THE NO. 11 COARSE AGGREGATE AND PLACED BETWEEN THE NO. 11 COARSE AGGREGATE AND THE UNDISTURBED EARTH. ANY FABRIC JOINTS SHALL HAVE AN OVERLAP OF 18". THE NO. 11 COARSE AGGREGATE, THE GEOTECHNICAL FABRIC LAYER, AND THE FRAME AND GRATE TO BE INCLUDED IN THE COST OF THE DRYWELL.

2. AFTER INSTALLATION OF THE DRYWELLS AND BACKFILLING WITH THE NO. 11 COARSE AGGREGATE, THE CONTRACTOR WILL SURCHARGE EACH DRYWELL WITH A MINIMUM OF 3000 GALLONS OF WATER PRIOR TO ANY PAVEMENT PLACEMENT. SURCHARGE WATER SHALL BE APPLIED AT A RATE THAT WILL COMPLETELY FILL THE DRYWELL.

City of Elkhart

PUBLIC WORKS & UTILITIES
ENGINEERING DEPARTMENT

TITLE:

PRECAST PERFORATED DRYWELL

DRAWN BY: JJS	DATE: 02/11/14	SCALE: N.T.S.	DRAWING NO. 5-2

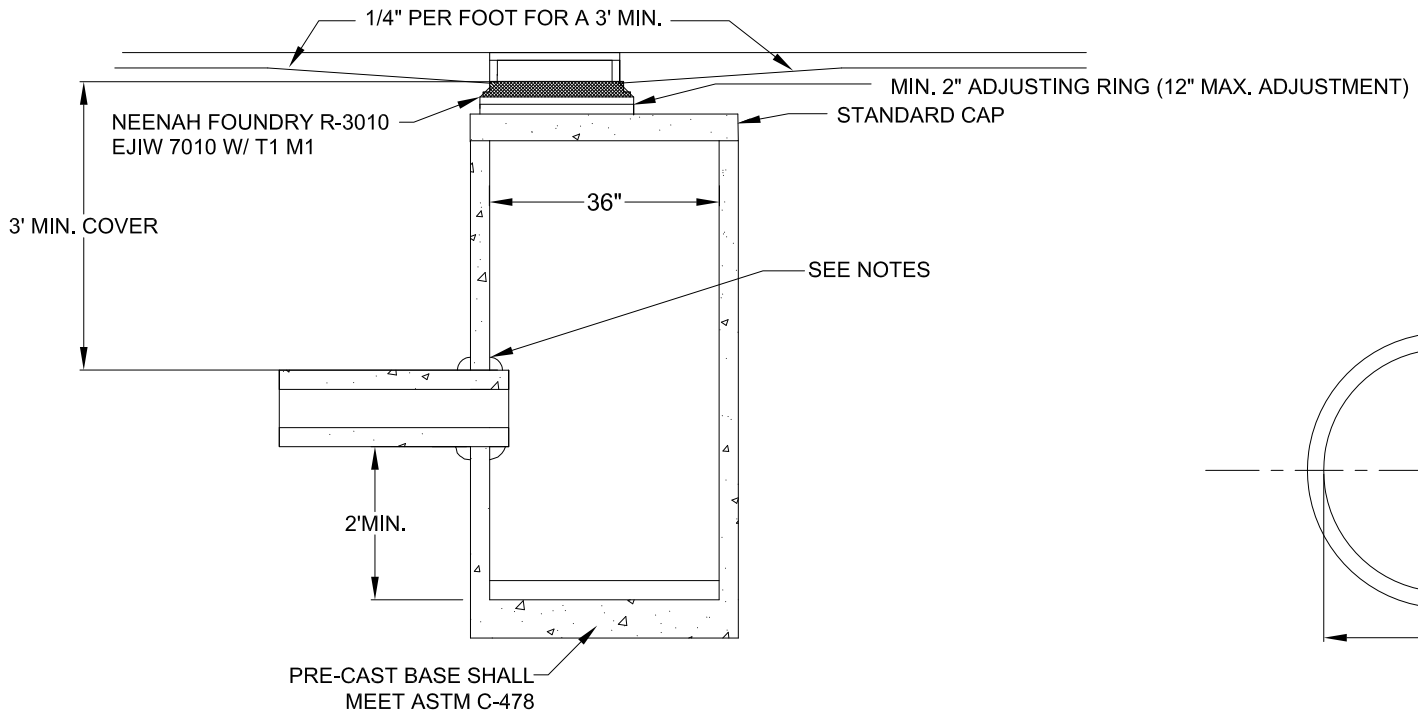

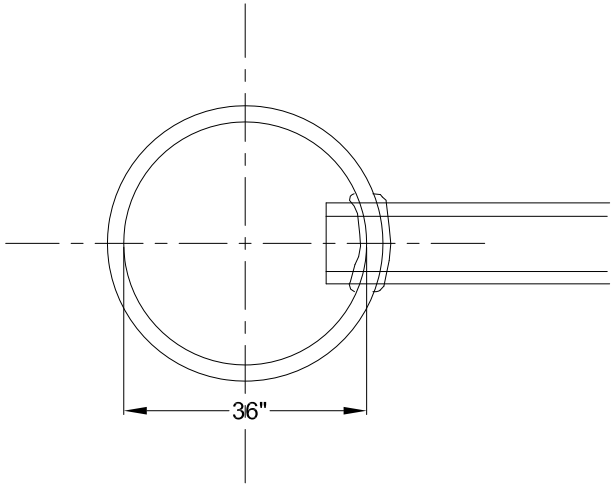

NOTES:

1. ALL OPENINGS SHALL BE CORED OR PRECAST.

2. ALL STORM PIPES ENTERING THE CATCH BASIN SHALL USE HIGH PERFORMANCE FLEXIBLE CONNECTORS MEETING ASTM C 923.

3. INLETS USE THE SAME DETAIL BUT DO NOT INCLUDE A 2' SUMP.

City of Elkhart

PUBLIC WORKS & UTILITIES
ENGINEERING DEPARTMENT

TITLE: STANDARD CATCH BASIN DETAIL

DRAWN BY: JJS	DATE: 11/14/14	SCALE: N.T.S.	DRAWING NO. 5-3

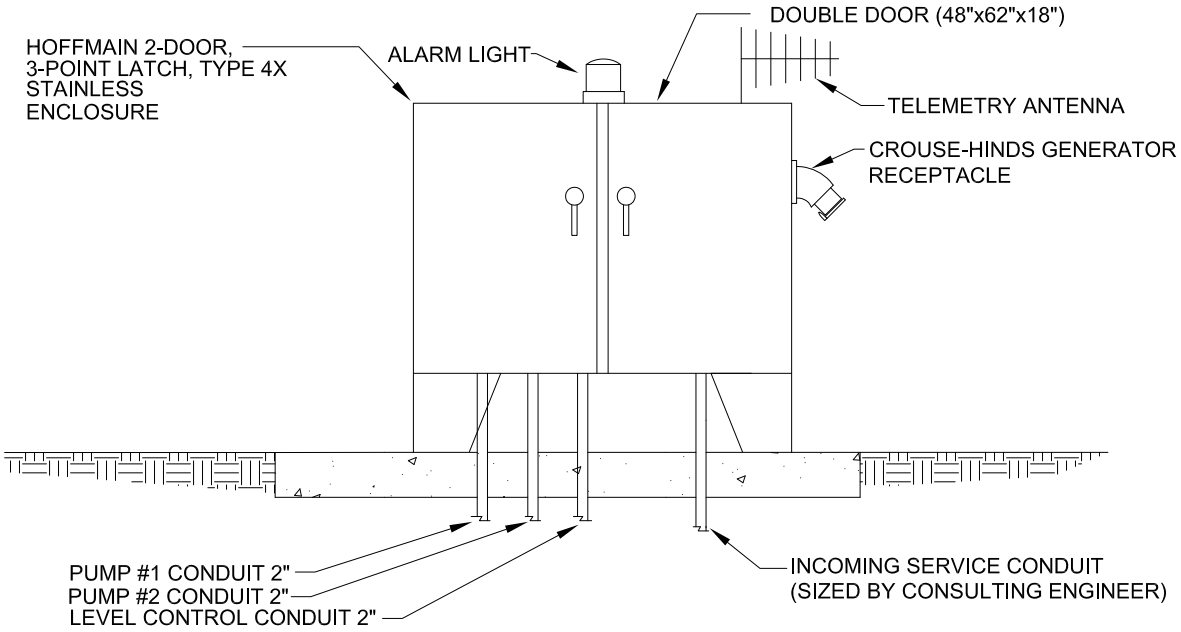

SECTION AA

CONTROL PANEL

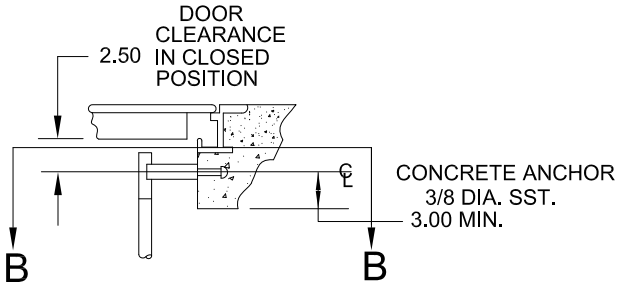

UPPER GUIDE RAIL BRACKET

MOUNTING DETAIL

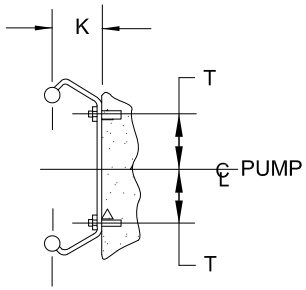

SECTION BB

PUMP GUIDE RAIL

City of Elkhart — PUBLIC WORKS & UTILITIES ENGINEERING DEPARTMENT	TITLE: LIFT STATION DETAIL			
	DRAWN BY: JJS	DATE: 02/11/14	SCALE: N.T.S.	DRAWING NO. 5-4

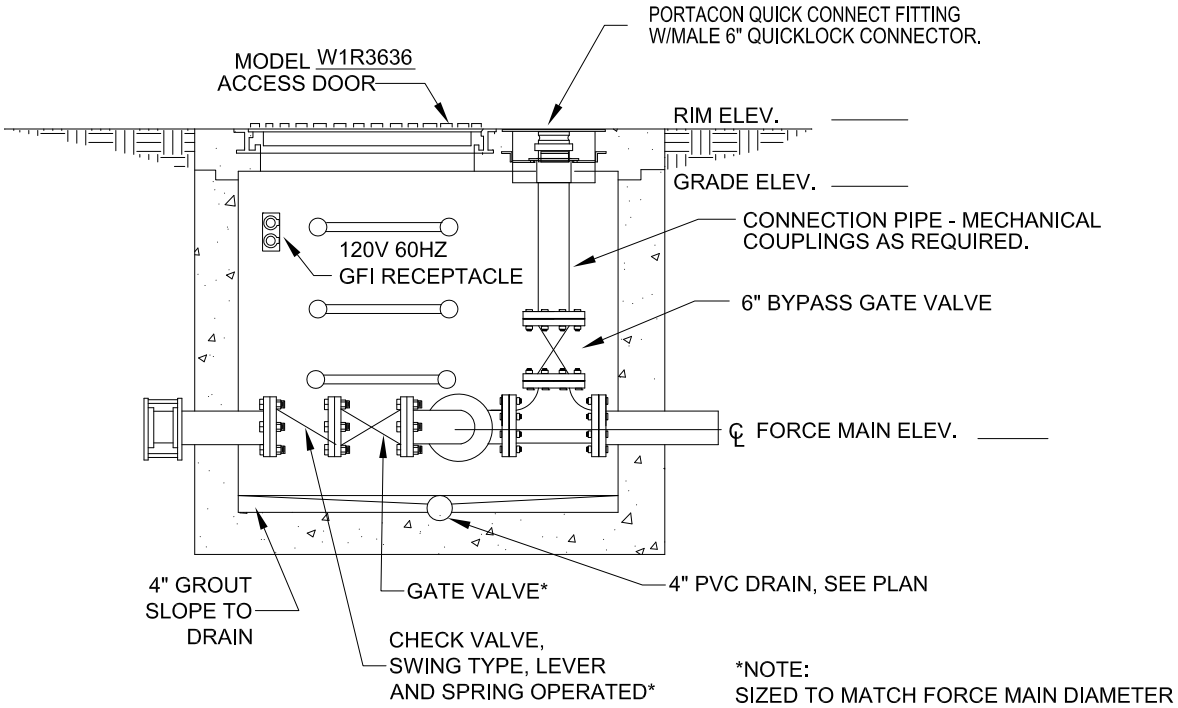

VALVE VAULT

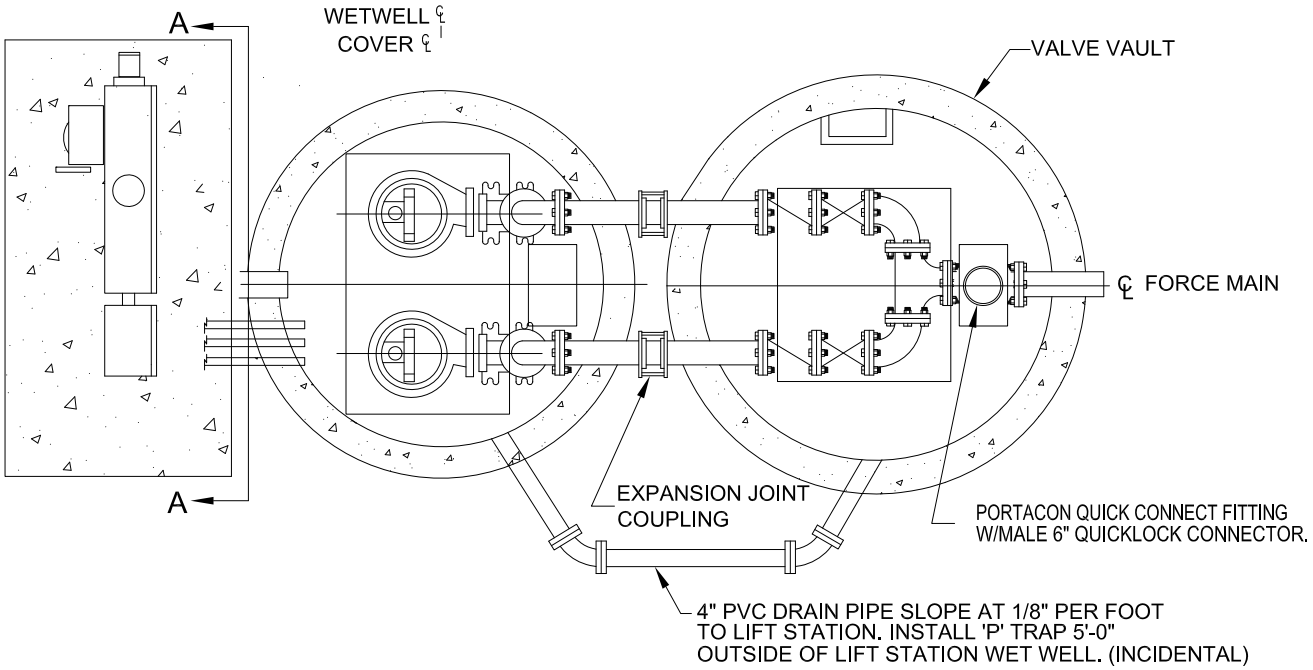

LIFT STATION LAYOUT

City of Elkhart — PUBLIC WORKS & UTILITIES ENGINEERING DEPARTMENT	TITLE: LIFT STATION DETAIL			
	DRAWN BY: JJS	DATE: 02/11/14	SCALE: N.T.S.	DRAWING NO. 5-5

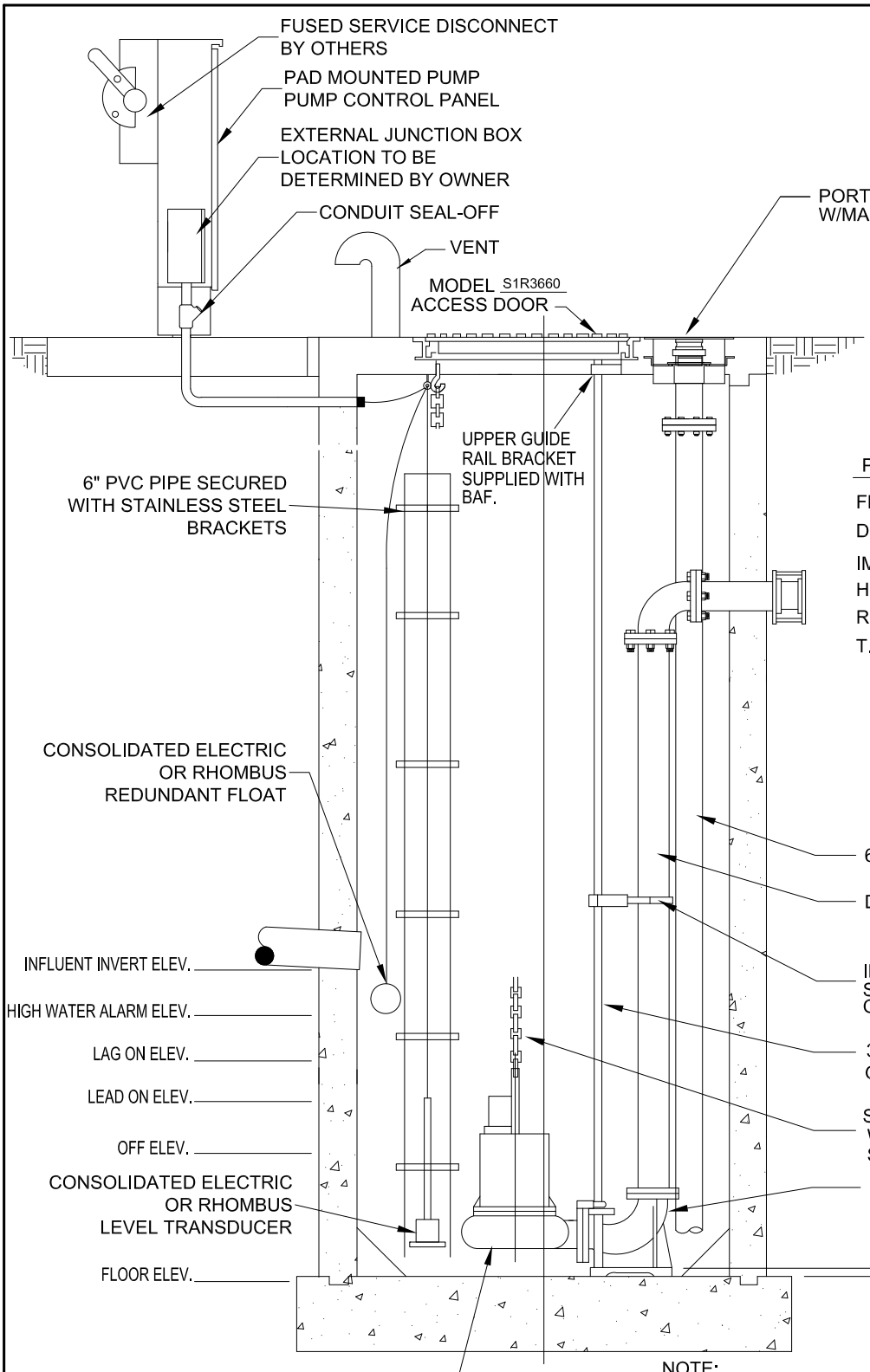

INCOMING SERVICE

VOLTS	460
AMPS	
PHASE	3Ø
HERTZ	60
WIRE	3

PUMP SPECIFICATIONS

FLYGT OR ABS PUMP MODEL _____

DESIGN CAPACITY _____ GPM @ _____ TDH

IMPELLER SIZE _____

HORSEPOWER _____

RPM _____

T.D.H. _____

WET WELL

NOTE:

1. TRANSDUCER & BACK-UP FLOATS MUST BE INSTALLED OUT OF INFLUENT FLOW STREAM TO AVOID TURBULENCE.
2. ALL DIMENSIONS ARE IN INCHES OR FEET AND INCHES.
3. ALL ELECTRICAL MOTORS & WIRING SHALL COMPLY WITH THE "NATIONAL ELECTRIC CODE LATEST EDITION".

City of Elkhart

PUBLIC WORKS & UTILITIES ENGINEERING DEPARTMENT

TITLE: LIFT STATION DETAIL

DRAWN BY: JJS	DATE: 02/11/14	SCALE: N.T.S.	DRAWING NO. 5-6

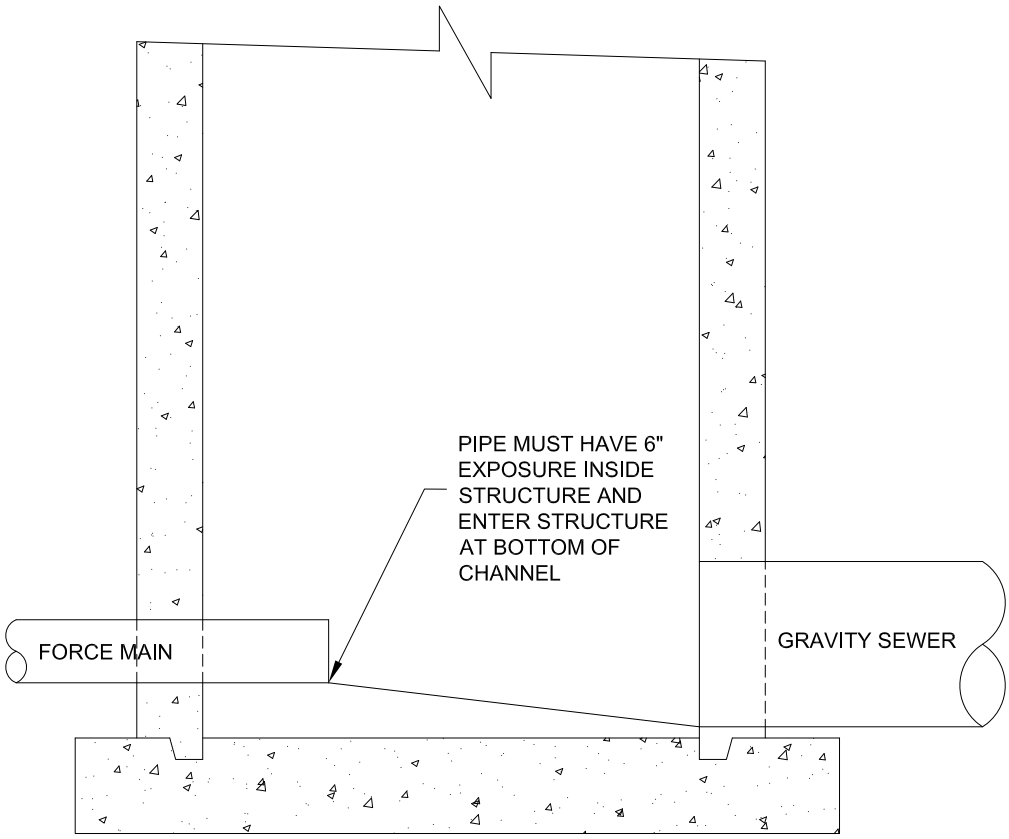

NOTE:

1. ALL OPENINGS SHALL BE CORED.
2. ALL SANITARY PIPES, REGARDLESS OF SIZE, ENTERING THE MANHOLE SHALL USE HIGH PERFORMANCE FLEXIBLE CONNECTORS MEETING ASTM C 923
3. ALL STORM PIPES ENTERING THE MANHOLE SHALL USE HIGH PERFORMANCE FLEXIBLE CONNECTORS MEETING ASTM C 923.
4. NO INTERNAL OR EXTERNAL FORCE MAIN DROPS SHALL BE ALLOWED.

City of Elkhart

PUBLIC WORKS & UTILITIES
ENGINEERING DEPARTMENT

TITLE: FORCE MAIN CONNECTION TO MANHOLE

DRAWN BY: JJS	DATE: 02/11/14	SCALE: N.T.S.	DRAWING NO. 5-7

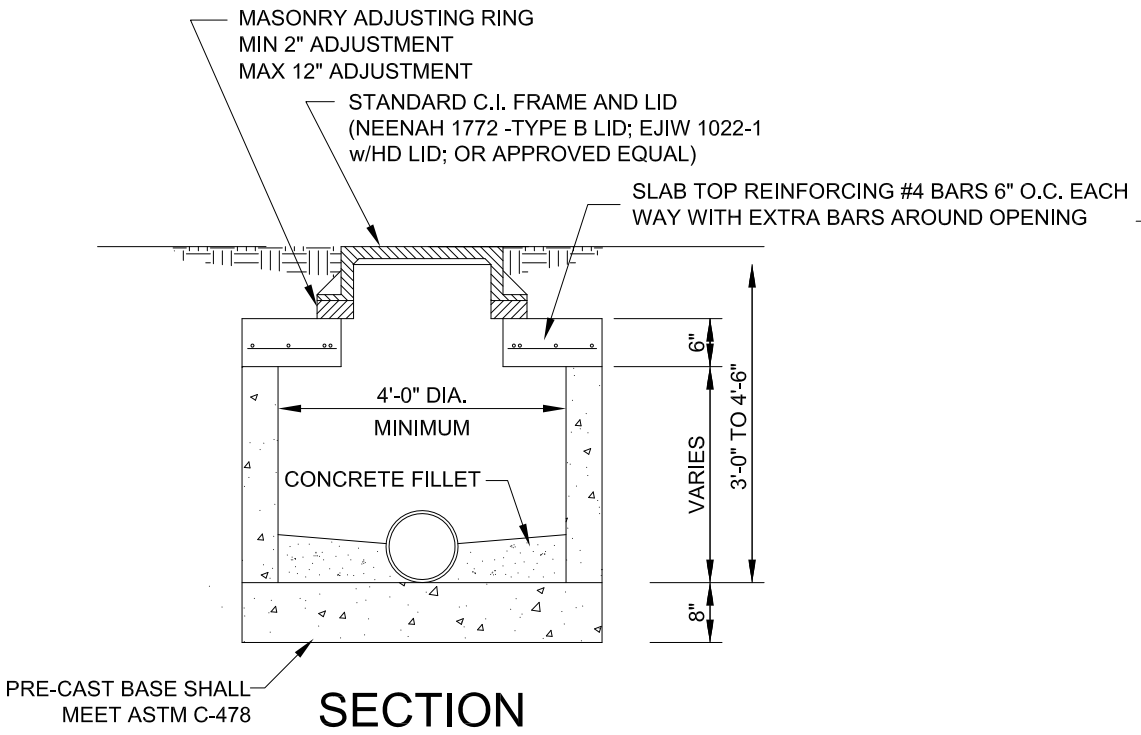

SECTION

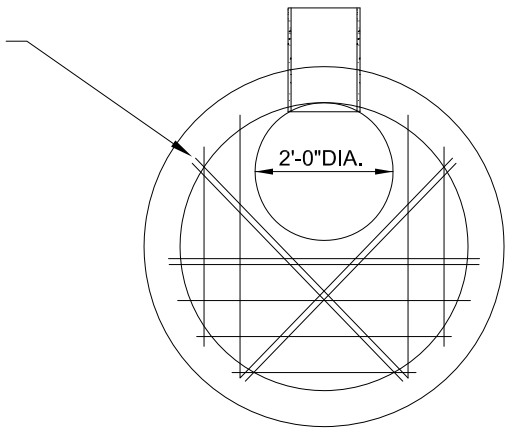

TOP REINFORCING PLAN

City of Elkhart — PUBLIC WORKS & UTILITIES ENGINEERING DEPARTMENT	TITLE: STANDARD MANHOLE 3'-0" TO 4'-6" DEPTH			
	DRAWN BY: JJS	DATE: 02/11/14	SCALE: N.T.S.	DRAWING NO. 5-8

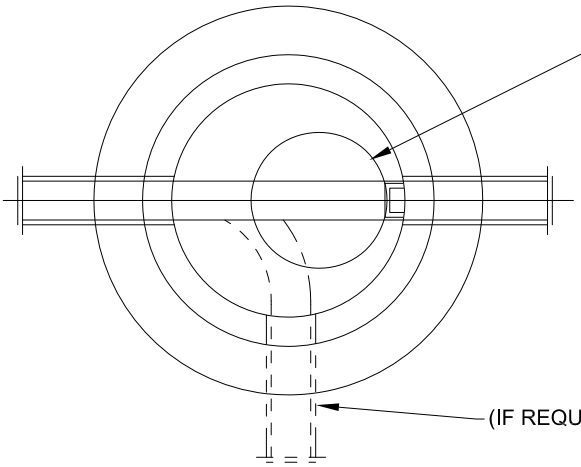

PLAN

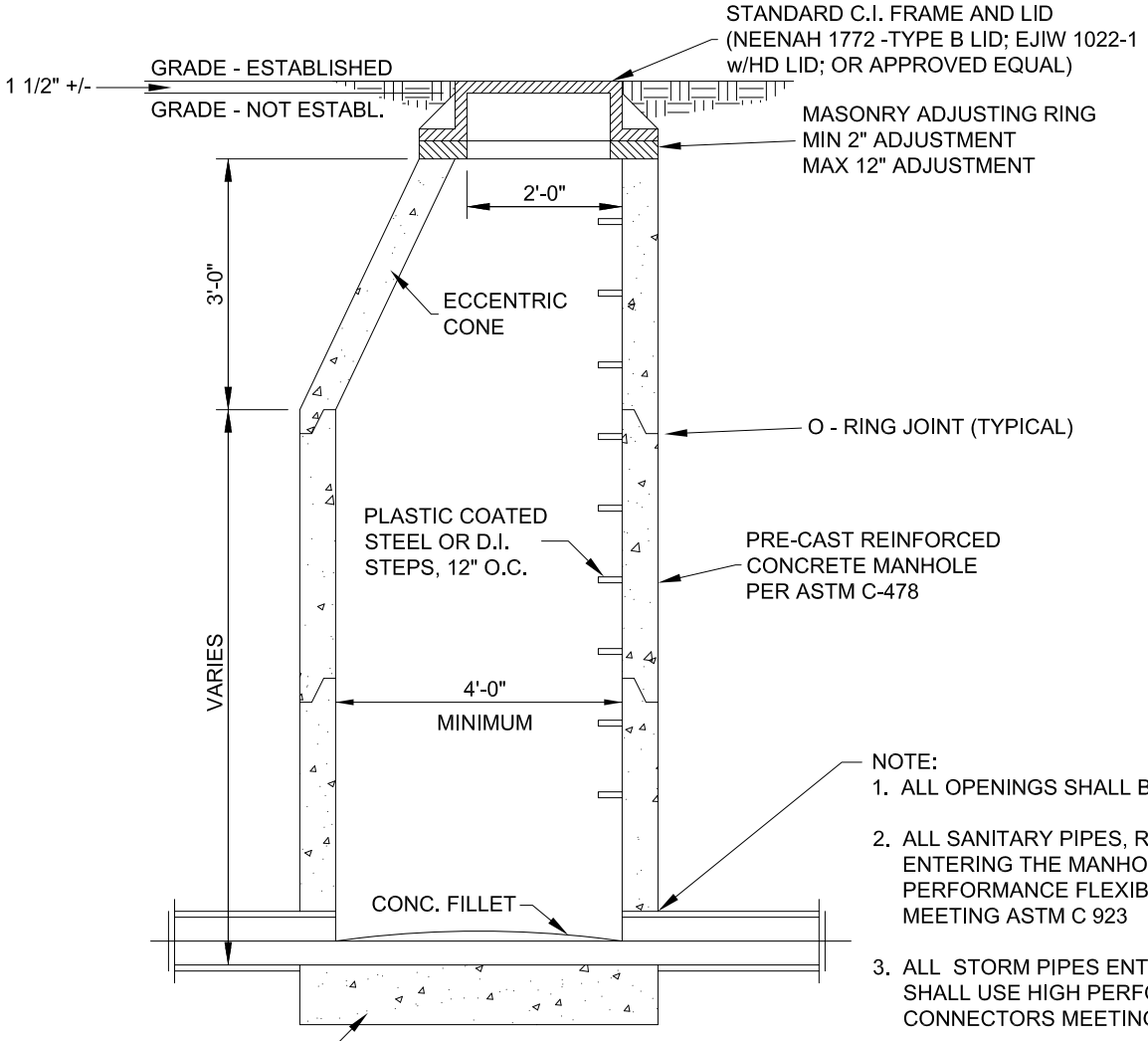

SECTION

NOTE:

1. ALL OPENINGS SHALL BE CORED.
2. ALL SANITARY PIPES, REGARDLESS OF SIZE, ENTERING THE MANHOLE SHALL USE HIGH PERFORMANCE FLEXIBLE CONNECTORS MEETING ASTM C 923
3. ALL STORM PIPES ENTERING THE MANHOLE SHALL USE HIGH PERFORMANCE FLEXIBLE CONNECTORS MEETING ASTM C 923.
4. MANHOLE STAIRS DO NOT NEED TO ALIGN WITH MANHOLE COVER/OPENING.

City of Elkhart

PUBLIC WORKS & UTILITIES
ENGINEERING DEPARTMENT

TITLE: STANDARD PRE-CAST MANHOLE

DRAWN BY: JJS	DATE: 02/11/14	SCALE: N.T.S.	DRAWING NO. 5-9

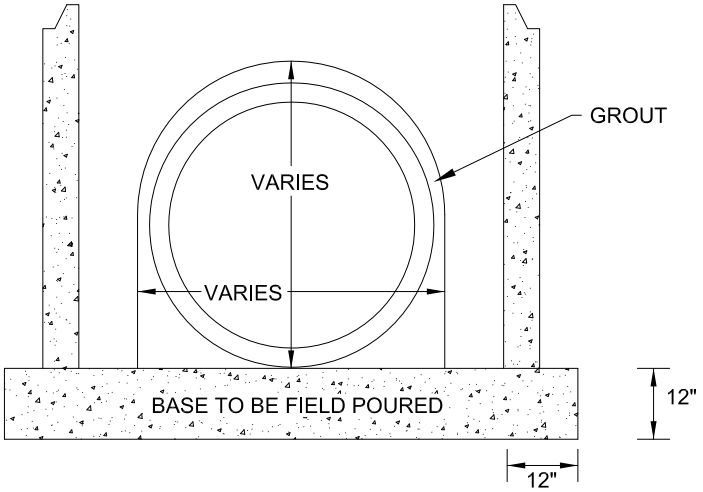

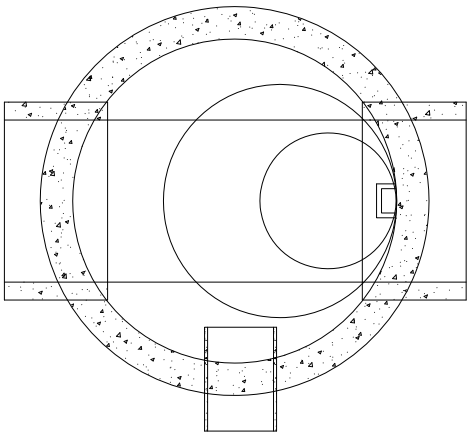

PLAN

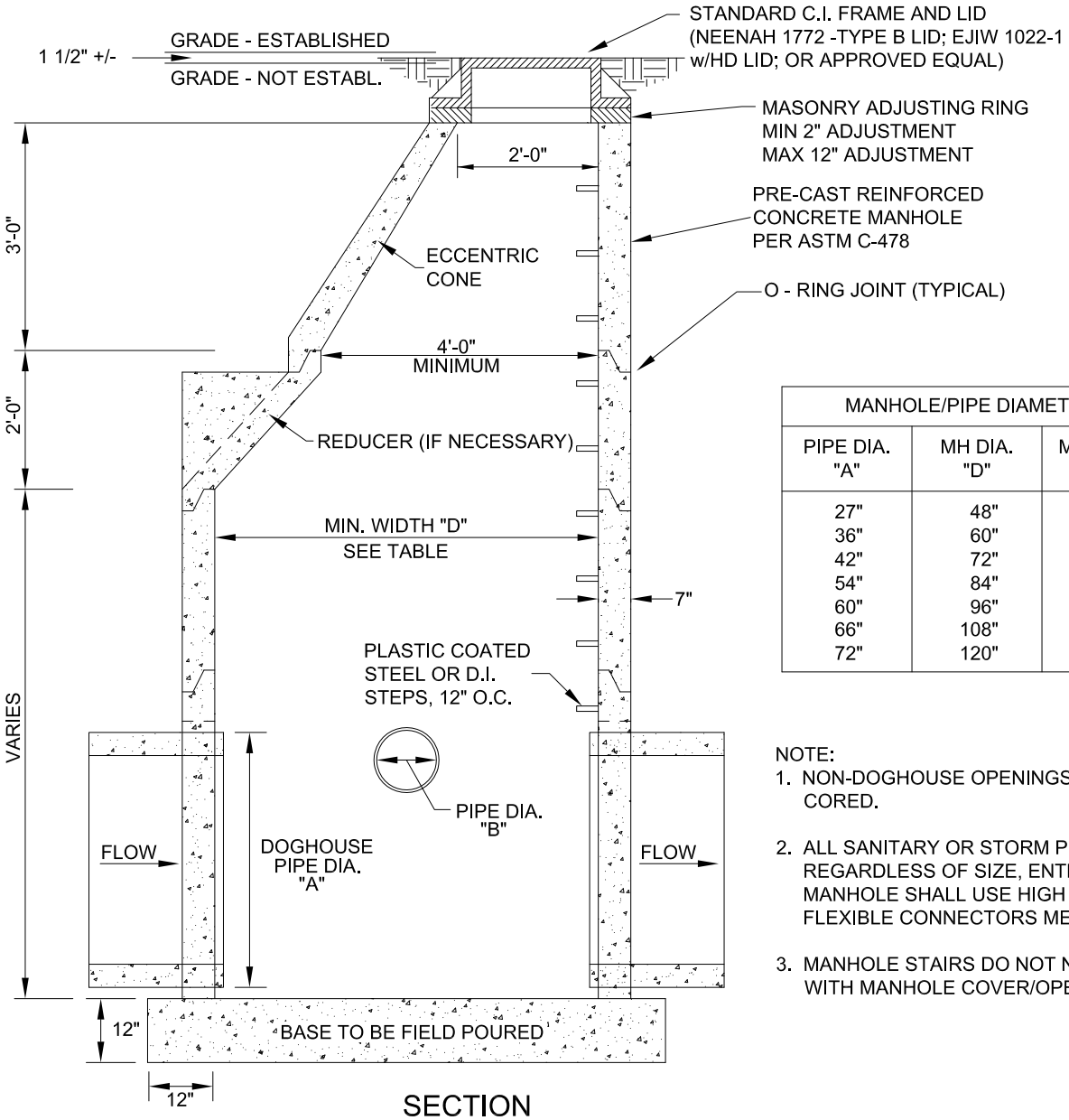

SECTION

MANHOLE/PIPE DIAMETERS		
PIPE DIA. "A"	MH DIA. "D"	MAX. PIPE DIA. "B"
27"	48"	15"
36"	60"	15"
42"	72"	27"
54"	84"	30"
60"	96"	36"
66"	108"	42"
72"	120"	54"

NOTE:

1. NON-DOGHOUSE OPENINGS SHALL BE CORED.
2. ALL SANITARY OR STORM PIPES, REGARDLESS OF SIZE, ENTERING THE MANHOLE SHALL USE HIGH PERFORMANCE FLEXIBLE CONNECTORS MEETING ASTM C 923
3. MANHOLE STAIRS DO NOT NEED TO ALIGN WITH MANHOLE COVER/OPENING.

City of Elkhart

PUBLIC WORKS & UTILITIES
ENGINEERING DEPARTMENT

TITLE: STANDARD DOGHOUSE MANHOLE

DRAWN BY: JJS	DATE: 02/11/14	SCALE: N.T.S.	DRAWING NO. 5-10

NOTES:

1. AN OUTSIDE DROP IS REQUIRED WHEN INVERT DIFFERENTIAL IS 24 INCHES OR GREATER AND IS ONLY ALLOWED FOR GRAVITY SEWERS, NOT FORCE MAINS.
2. HEIGHT OF DROP PIPE IS TO BE AS SHOWN ON THE PLANS OR WILL BE DETERMINED AT THE TIME OF CONSTRUCTION.
3. MATERIALS FOR THE CROSS, DROP PIPE AND BEND SHALL BE OF THE SAME MATERIAL TYPE.
4. OUTSIDE DROP PIPES REQUIRE A 6" THICK(MINIMUM) CLASS "C" CONCRETE OR FLOWABLE FILL ENCASEMENT ON THREE SIDES OF PIPE AND TIED TO MANHOLE WALL WITH 5/8" - "U" RODS X 6" LONG @ 12".
5. ALL PIPES ENTERING THE MANHOLE SHALL USE HIGH PERFORMANCE FLEXIBLE CONNECTORS MEETING ASTM C 923.
6. DIAMETER OF THE DROP PIPE, D2, MAY BE ONE SIZE SMALLER THAN THE DIAMETER OF THE HORIZONTAL PIPE, D1.
7. MANHOLE STAIRS DO NOT NEED TO ALIGN WITH MANHOLE COVER/OPENING.

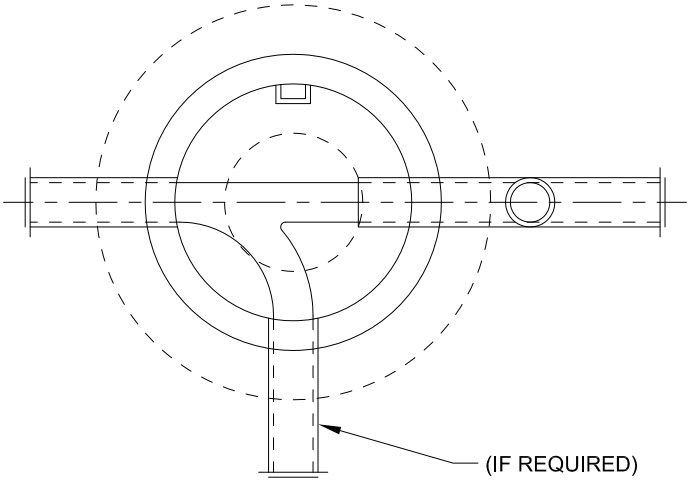

PLAN

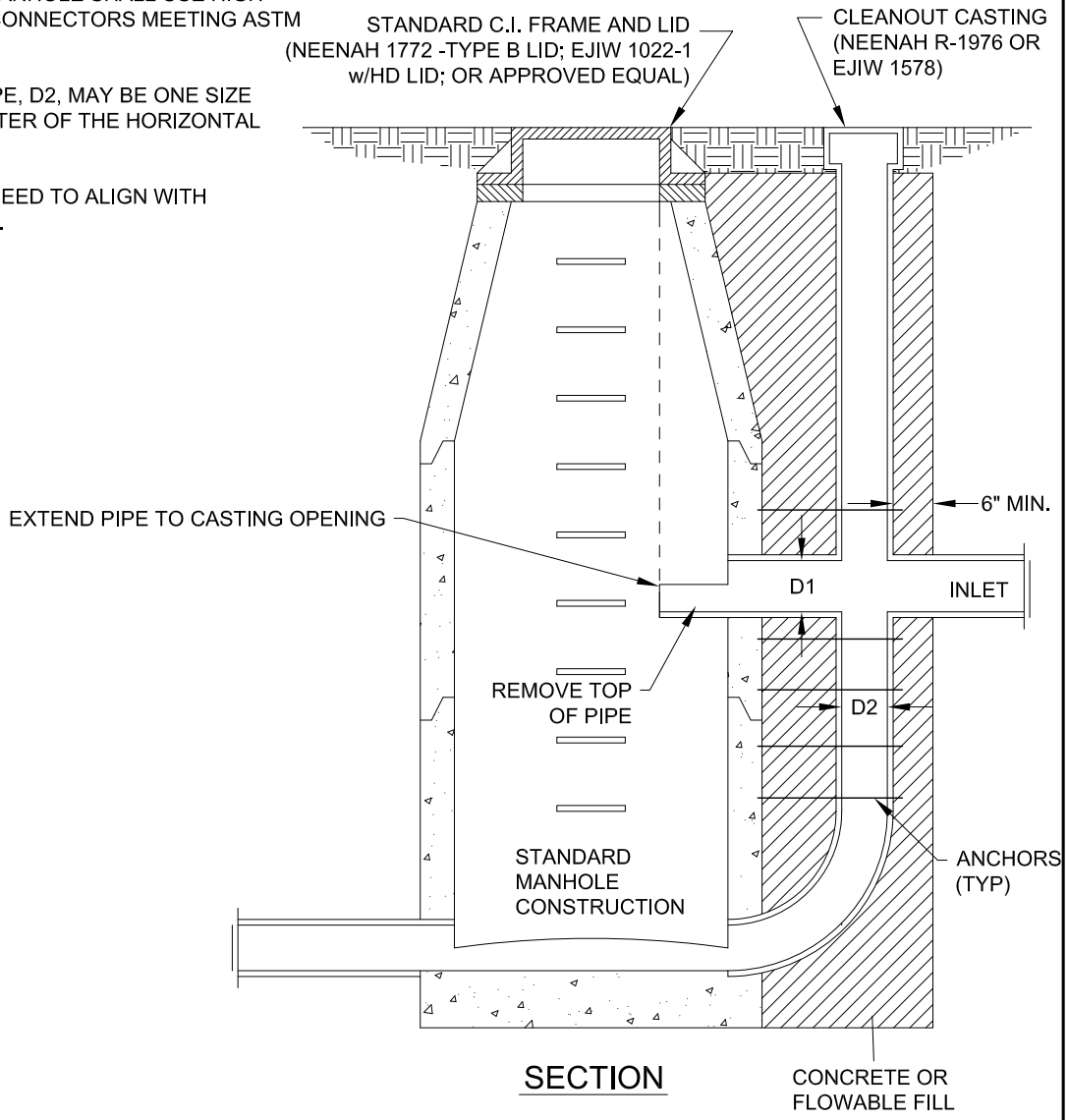

SECTION

City of Elkhart

PUBLIC WORKS & UTILITIES ENGINEERING DEPARTMENT

TITLE: STANDARD DROP MANHOLE

DRAWN BY: JJS	DATE: 01/26/16	SCALE: N.T.S.	DRAWING NO. 5-11

SANITARY LID

STORM LID

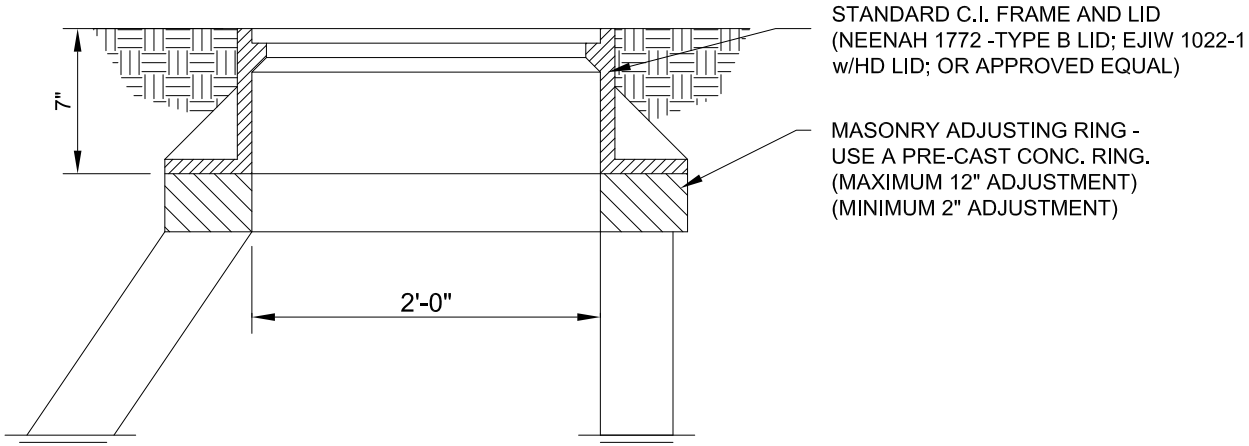

City of Elkhart

PUBLIC WORKS & UTILITIES
ENGINEERING DEPARTMENT

TITLE: TYPICAL DETAIL FOR MANHOLE TOP FINISHING

DRAWN BY: JJS	DATE: 02/11/14	SCALE: N.T.S.	DRAWING NO. 5-12

MAX. TRENCH WIDTH AT TOP OF PIPE	
DIA. "D"	WIDTH "W"
6"	18"
8"	24"
10"	24"
12"	30"
15"	36"
18"	39"
21"	42"
24"	45"
27"	48"
30"	53"
36"	66"
42"	75"
48"	82"

MIN. THICKNESS "T"	
TO 15"	6"
18" TO 36"	9"
OVER 36"	12"

NOTE: CLAY, PEAT/ORGANIC, MARL, AND FROZEN SOILS ARE NOT SUITABLE FILL AND SHALL NOT BE USED AS BACKFILL. OTHER SOILS MAY ALSO NOT BE SUITABLE, AS IDENTIFIED BY T HE ENGINEER.

NOTE: PIPE SHALL BE FIRMLY BEDDED ON UN-DISTURBED SOIL AS SHOWN IN LEFT SECTION. IN THE EVENT THE SOIL CAN NOT BE SHAPED, OR THE CONTRACTOR PREFERS, THE TRENCH SHALL BE EXCAVATED TO A GREATER DEPTH AND BACKFILLED WITH SUITABLE FILL AND COMPACTED AS SHOWN IN RIGHT SECTION. IN ALL CASES BELL HOLES SHALL BE PROVIDED SO THAT BELL SUPPORTS NO WEIGHT.

NOTE: ALL PVC PIPE SHALL BE INSTALLED FOLLOWING THE ASTM STANDARD PRACTICE D 2321-89.

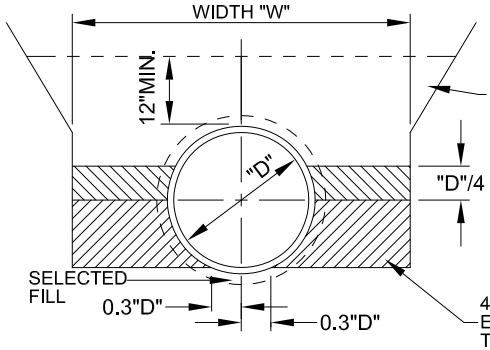

IN SUITABLE SOILS

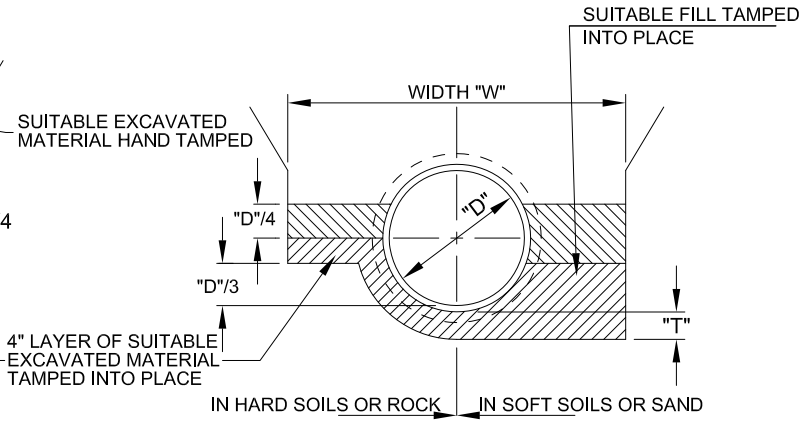

IN SOFT OR HARD SOILS

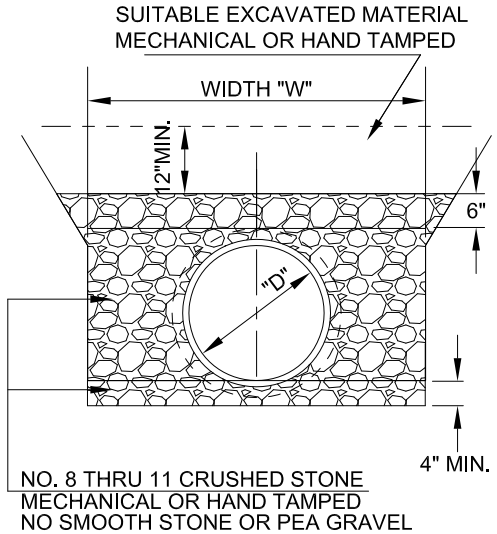

PVC PIPE

City of Elkhart

PUBLIC WORKS & UTILITIES
ENGINEERING DEPARTMENT

TITLE: TYPICAL SEWER TRENCH, PIPE LAYING, AND BEDDING DETAILS

DRAWN BY: JJS	DATE: 02/11/14	SCALE: N.T.S.	DRAWING NO. 5-13

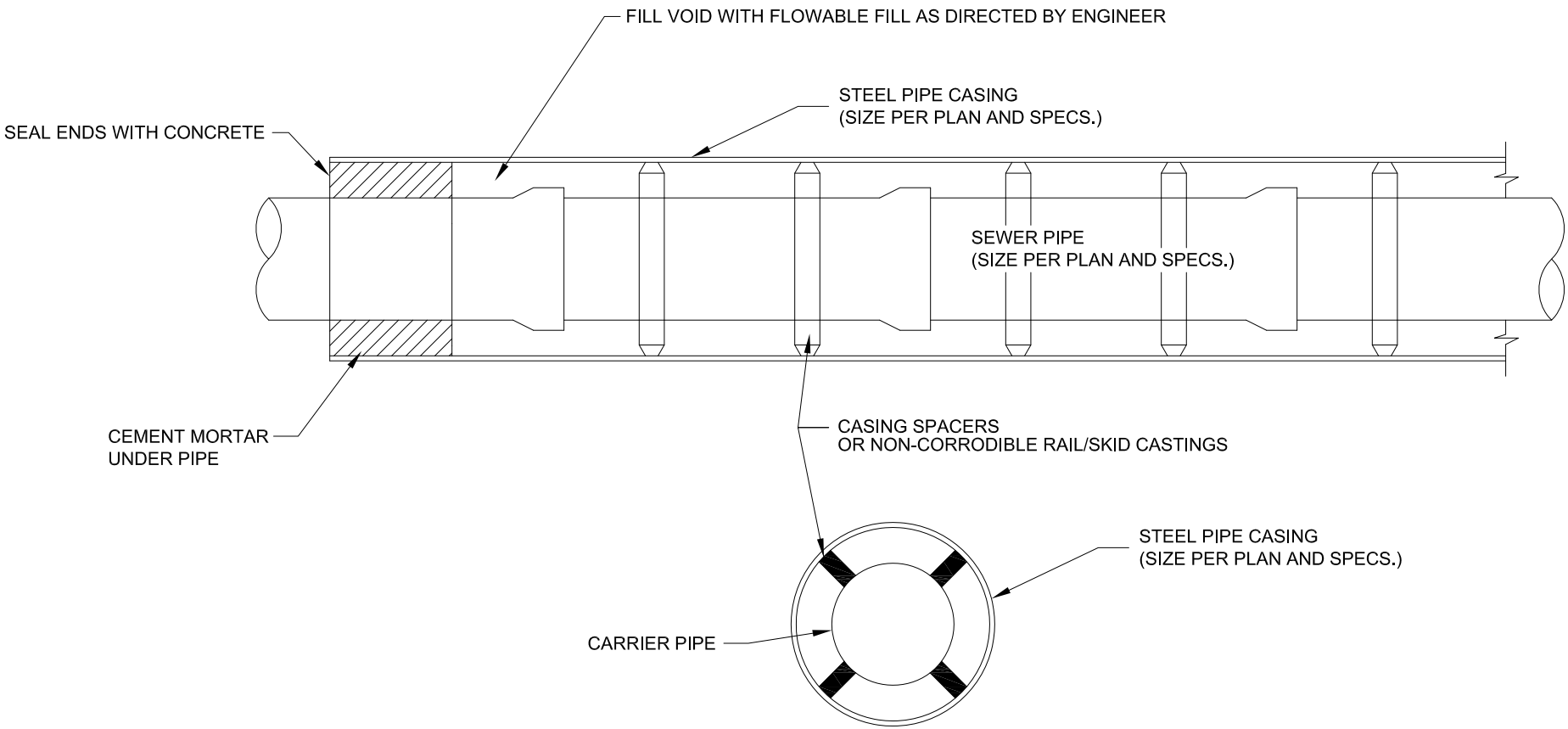

SECTION

City of Elkhart

PUBLIC WORKS & UTILITIES
ENGINEERING DEPARTMENT

TITLE: TYPICAL SEWER CASING DETAIL

DRAWN BY: JJS	DATE: 02/11/14	SCALE: N.T.S.	DRAWING NO. 5-14

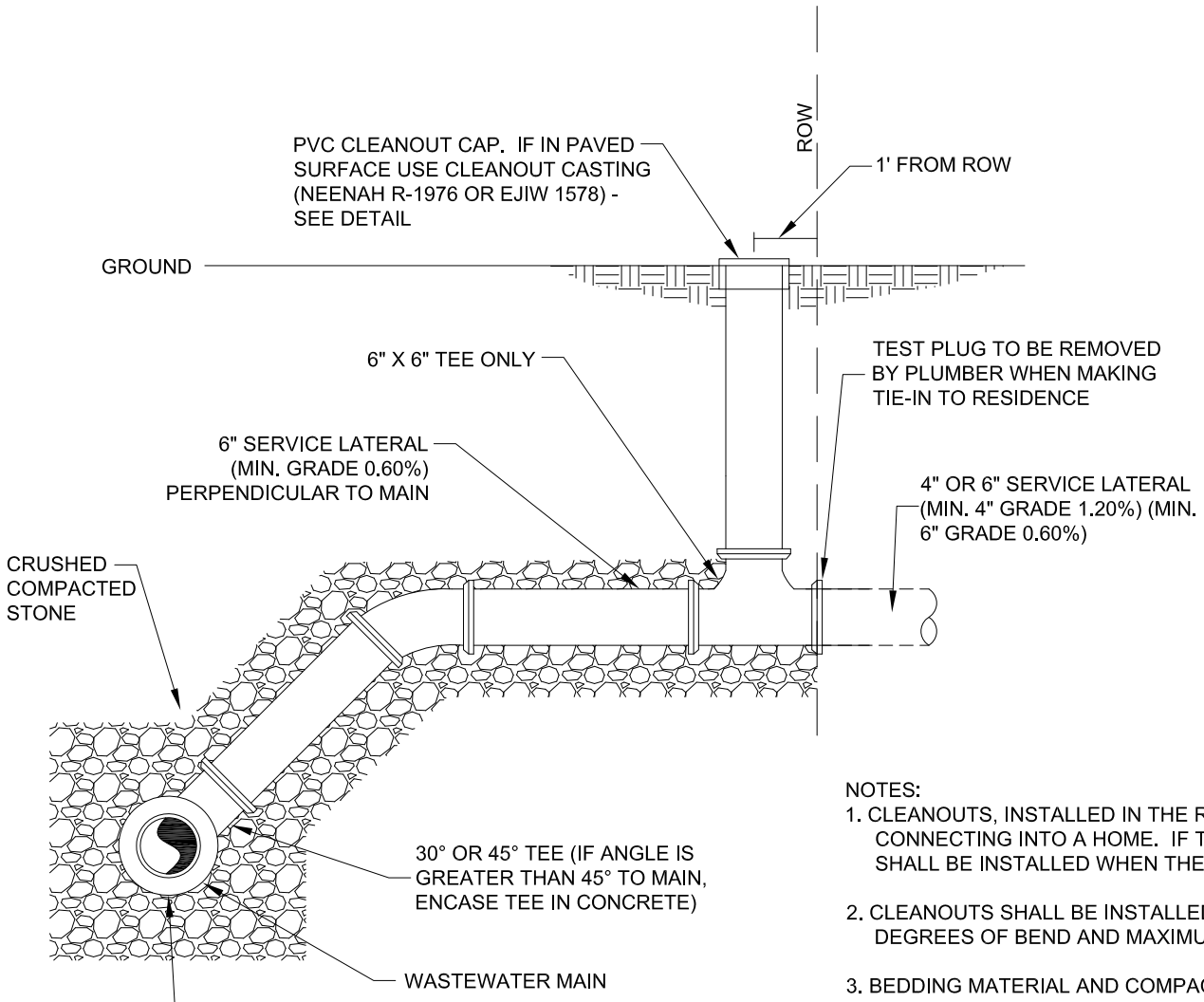

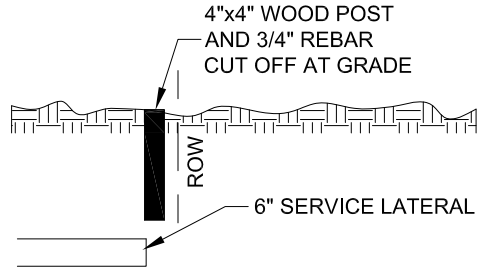

MARKER POST
(AT SERVICE STUB, FOR FUTURE CONNECTIONS)

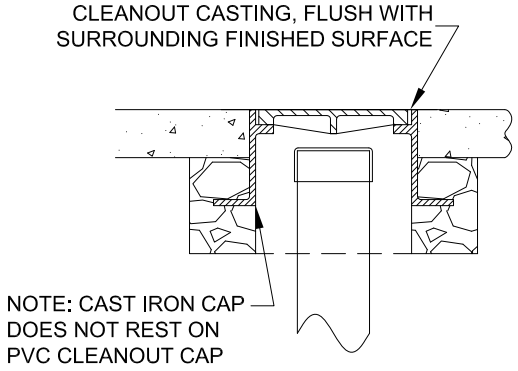

CLEANOUT DETAIL
(WITHIN PAVED SURFACE)

NOTES:

1. CLEANOUTS, INSTALLED IN THE ROW, ARE REQUIRED ON ALL SERVICE CONNECTIONS CONNECTING INTO A HOME. IF THE LATERAL IS A STUB FOR FUTURE USE, A CLEANOUT SHALL BE INSTALLED WHEN THE SERVICE IS CONNECTED.
2. CLEANOUTS SHALL BE INSTALLED EVERY 100 FEET, AT CHANGES IN PIPE SIZE, OR 135 DEGREES OF BEND AND MAXIMUM ALLOWABLE BEND IS 45 DEGREES.
3. BEDDING MATERIAL AND COMPACTION WITHIN THE CITY RIGHT-OF-WAY SHALL MEET CITY OF ELKHART STANDARDS.
4. SERVICE LINES LARGER THAN 6" MUST BE CONNECTED TO THE MAIN AT A MANHOLE.
5. A 6"X4" PVC REDUCER SHALL BE USED IF A 4" SERVICE LATERAL IS FOUND BEYOND THE ROW.

City of Elkhart

PUBLIC WORKS & UTILITIES
ENGINEERING DEPARTMENT

TITLE: TYPICAL RESIDENTIAL SEWER SERVICE CONNECTION

DRAWN BY: JJS	DATE: 02/11/14	SCALE: N.T.S.	DRAWING NO. 5-15

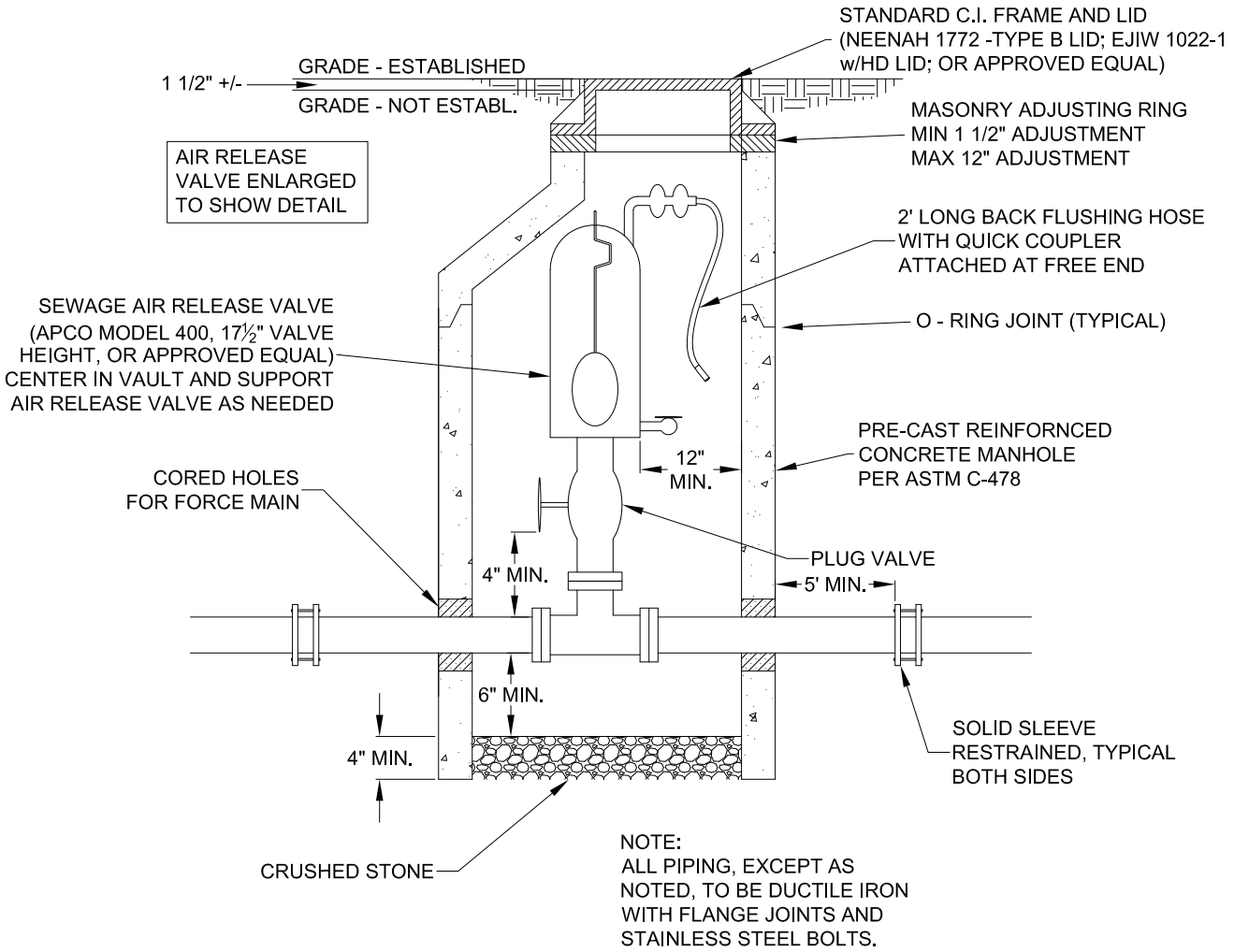

NOTE:
ALL PIPING, EXCEPT AS
NOTED, TO BE DUCTILE IRON
WITH FLANGE JOINTS AND
STAINLESS STEEL BOLTS.

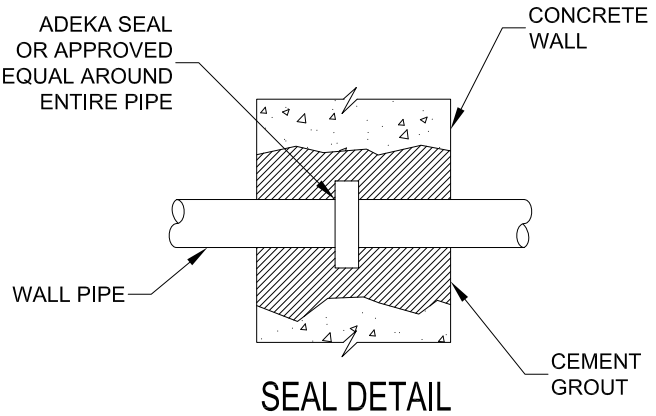

SEAL DETAIL

NOTE:
TO BE USED FOR ALL PIPES
PASSING THROUGH WALLS

City of Elkhart

PUBLIC WORKS & UTILITIES
ENGINEERING DEPARTMENT

TITLE: FORCE MAIN SEWER AIR RELEASE VALVE

DRAWN BY: JJS	DATE: 02/11/14	SCALE: N.T.S.	DRAWING NO. 5-16

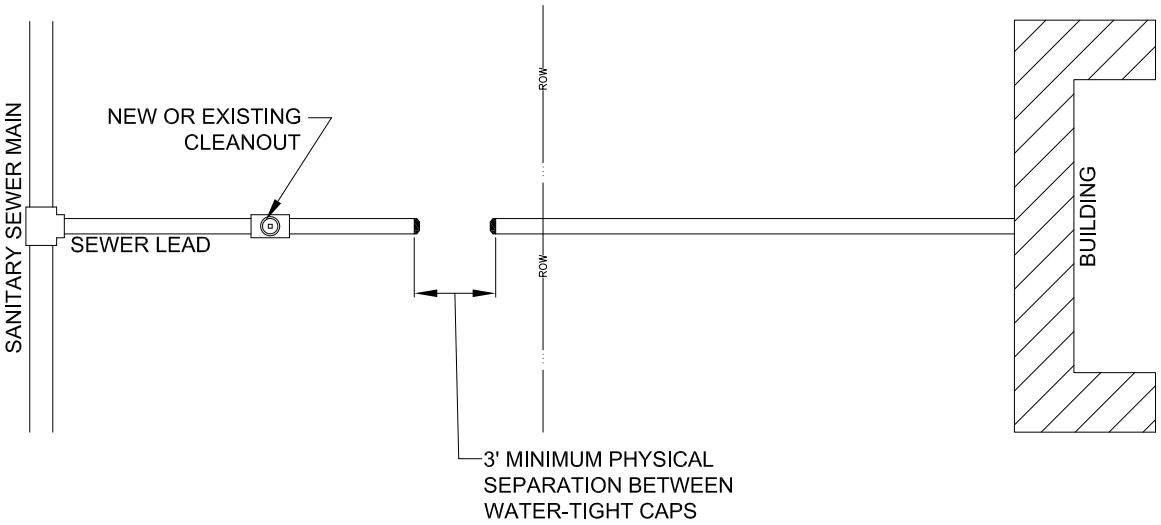

PLAN VIEW

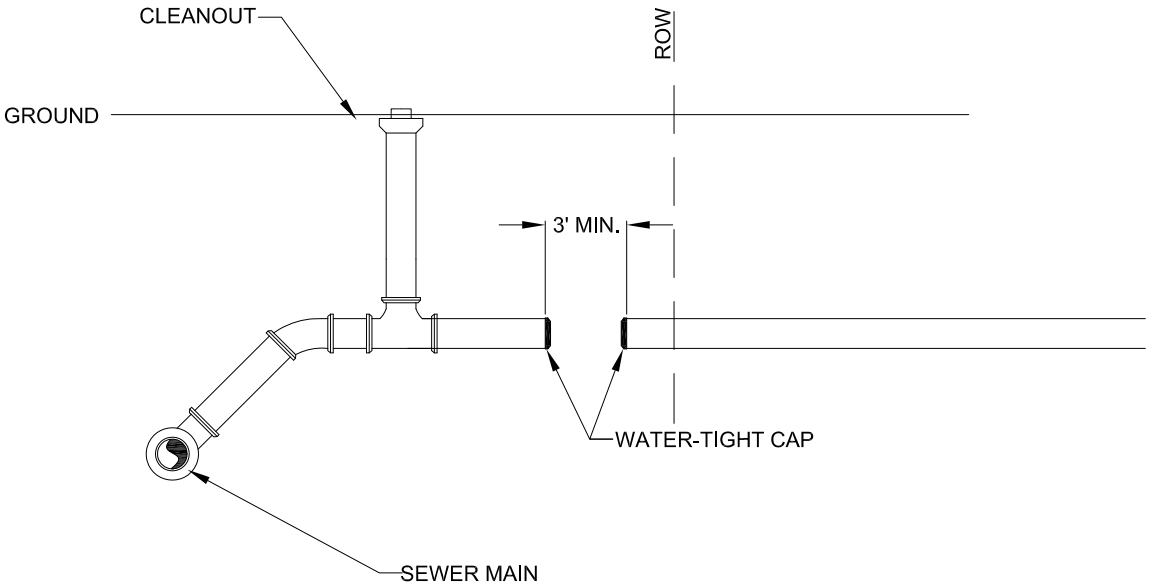

PROFILE VIEW

NOTES:
1. CAP SHALL BE FERNCO FLEXIBLE RUBBER CAP OR APPROVED EQUAL.

2. A CLEANOUT SHALL BE PROVIDED DOWNSTREAM OF THE DISCONNECTION POINT AND LOCATED WITHIN THE PUBLIC RIGHT-OF-WAY & WITNESSED BY THE CITY OF ELKHART.

City of Elkhart

PUBLIC WORKS & UTILITIES
ENGINEERING DEPARTMENT

TITLE:
SANITARY SEWER DISCONNECTION

DRAWN BY: JJS	DATE: 02/11/14	SCALE: N.T.S.	DRAWING NO. 5-17

* OR STREET GRADE

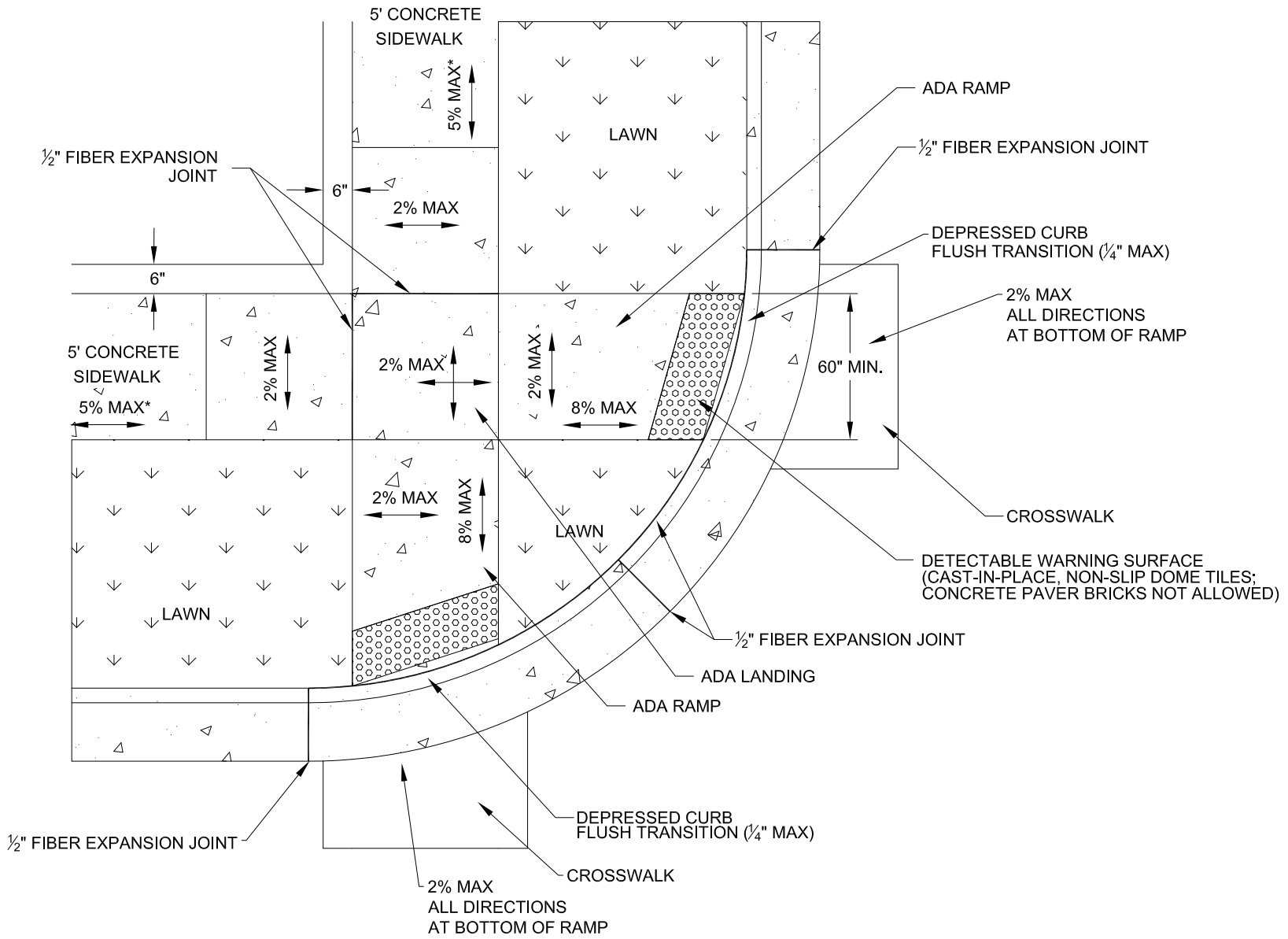

City of Elkhart

PUBLIC WORKS & UTILITIES
ENGINEERING DEPARTMENT

TITLE: TYPICAL SIDEWALK RAMP DETAIL - A

DRAWN BY: JJS	DATE: 02/11/14	SCALE: N.T.S.	DRAWING NO. 6-1

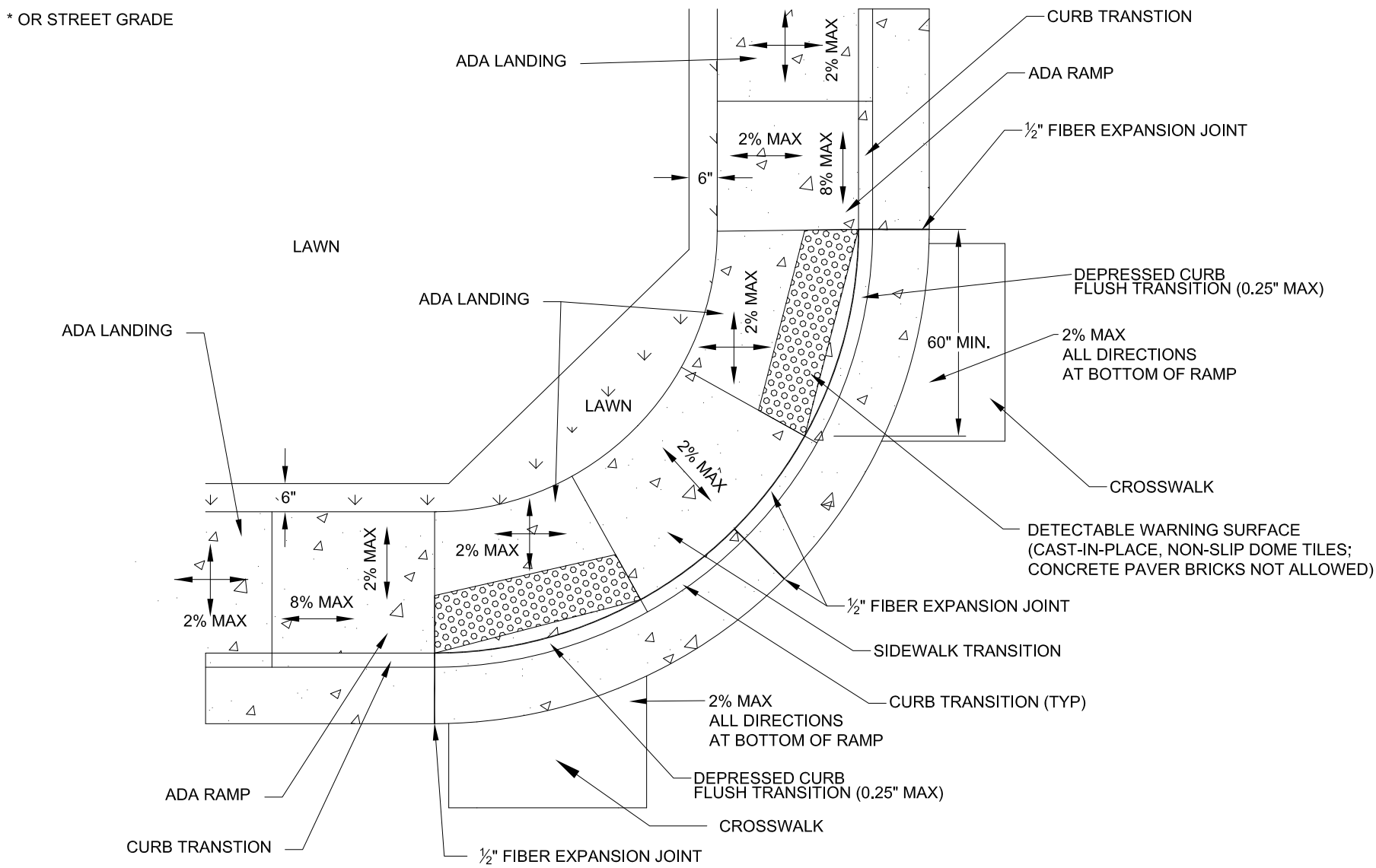

City of Elkhart

PUBLIC WORKS & UTILITIES
ENGINEERING DEPARTMENT

TITLE: TYPICAL SIDEWALK RAMP DETAIL - B

DRAWN BY: JJS	DATE: 01/12/15	SCALE: N.T.S.	DRAWING NO. 6-2

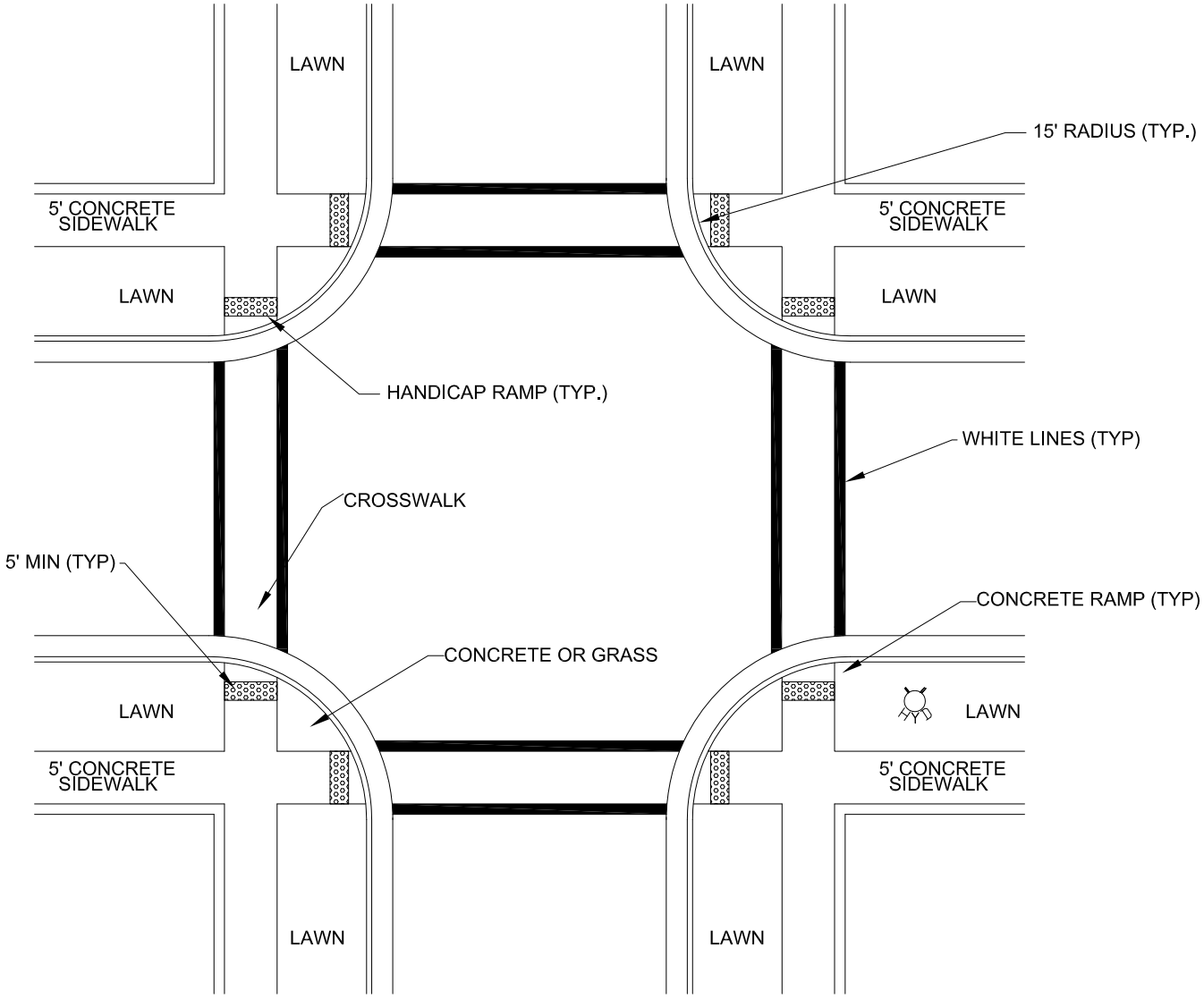

City of Elkhart

PUBLIC WORKS & UTILITIES
ENGINEERING DEPARTMENT

TITLE:

TYPICAL INTERSECTION LAYOUT

DRAWN BY: JJS	DATE: 02/11/14	SCALE: N.T.S.	DRAWING NO. 6-3

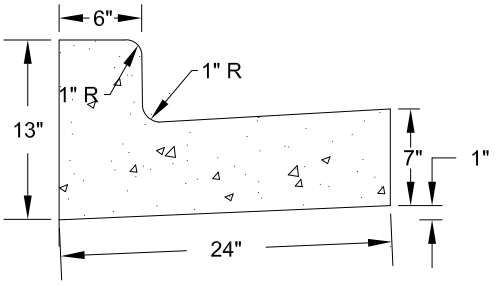

COMBINATION STRAIGHT CURB
AND GUTTER DETAIL

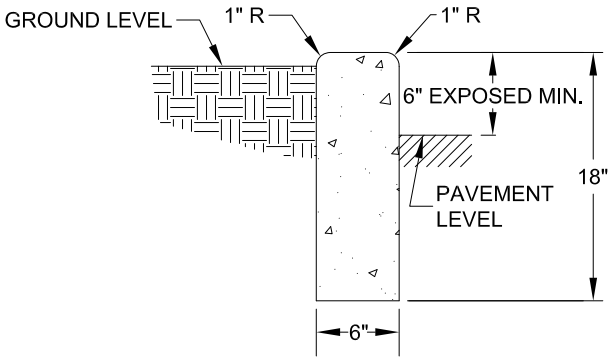

STRAIGHT CURB DETAIL

City of Elkhart

PUBLIC WORKS & UTILITIES
ENGINEERING DEPARTMENT

TITLE: STANDARD CURB DETAILS

DRAWN BY: JJS	DATE: 02/11/14	SCALE: N.T.S.	DRAWING NO. 6-4

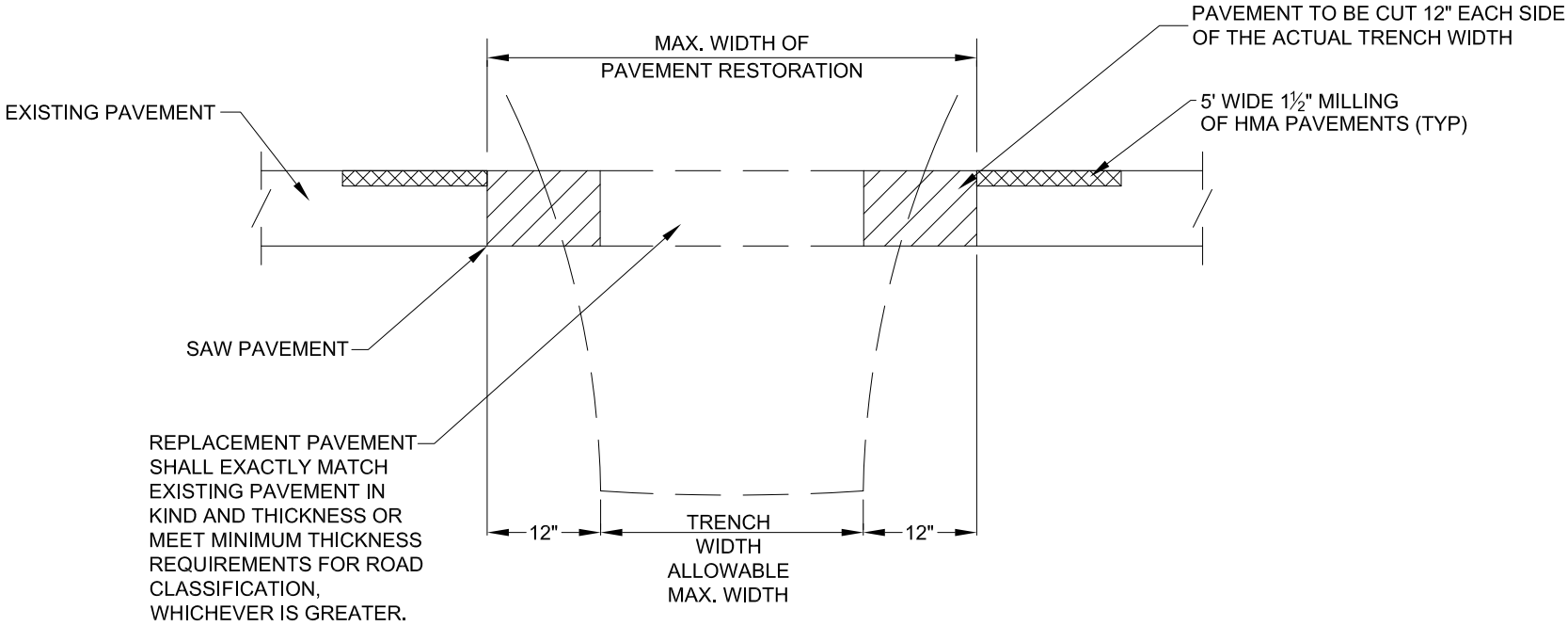

City of Elkhart

PUBLIC WORKS & UTILITIES
ENGINEERING DEPARTMENT

TITLE: TRENCH PAVEMENT CUTTING & RESTORATION

DRAWN BY: JJS	DATE: 01/26/16	SCALE: N.T.S.	FIGURE NO: 6-5

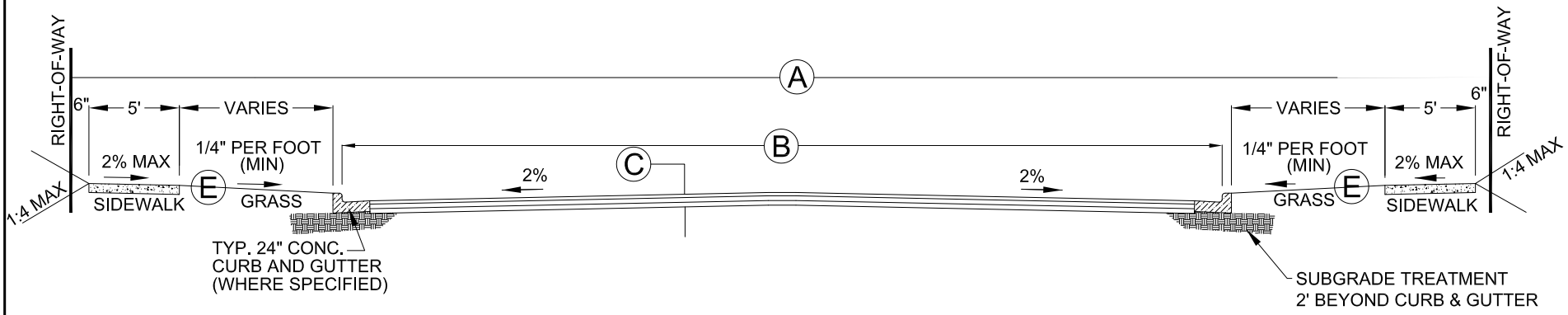

CONTRACTION JOINT TO BE PLACED EVERY 10' IN CONCRETE CURBS.
1/2" EXPANSION JOINT TO BE PLACED EVERY 100' IN CONCRETE CURBS AND SIDEWALK.

E 4" MIN. TOPSOIL W/ SEED

A RESIDENTIAL STREET ROW PRIMARY 80' TO 100' SECONDARY OR COLLECTOR 60' MINOR 50'	B RESIDENTIAL STREET PAV'T. WIDTH SECONDARY OR COLLECTOR 36' F/C TO F/C MINOR 31' F/C TO F/C	C RESIDENTIAL STREET PAV'T. 1 1/2" HMA SURFACE 2" HMA BINDER OR 6" CONCRETE 4" HMA BASE *2" COMP. AGG. BASE, HMA & CONC. (AS REQUIRED)
A COMMERCIAL/PRIMARY STREET ROW PRIMARY 100' TO 120' SECONDARY OR COLLECTOR 80' MINOR 60'	B COMMERCIAL/INDUSTRIAL ST. PAV'T. WIDTH PRIMARY 48' F/C TO F/C SECONDARY OR COLLECTOR 36' F/C TO F/C MINOR 31' F/C TO F/C	C COMMERCIAL/PRIMARY STREET PAV'T. 1 1/2" HMA SURFACE 3" HMA BINDER OR 9" CONCRETE 7" HMA BASE *3" COMP. AGG. BASE, HMA & CONC. (AS REQUIRED)

(MIN. REQUIREMENTS SHOWN)

NOTE:
ANY CHANGES OR ALTERATIONS MUST BE APPROVED BY THE DEPARTMENT OF PUBLIC WORKS AND UTILITIES

City of Elkhart

PUBLIC WORKS & UTILITIES
ENGINEERING DEPARTMENT

TITLE: TYPICAL ROAD CROSS SECTION

DRAWN BY: JJS	DATE: 02/11/14	SCALE: N.T.S.	DRAWING NO. 6-6

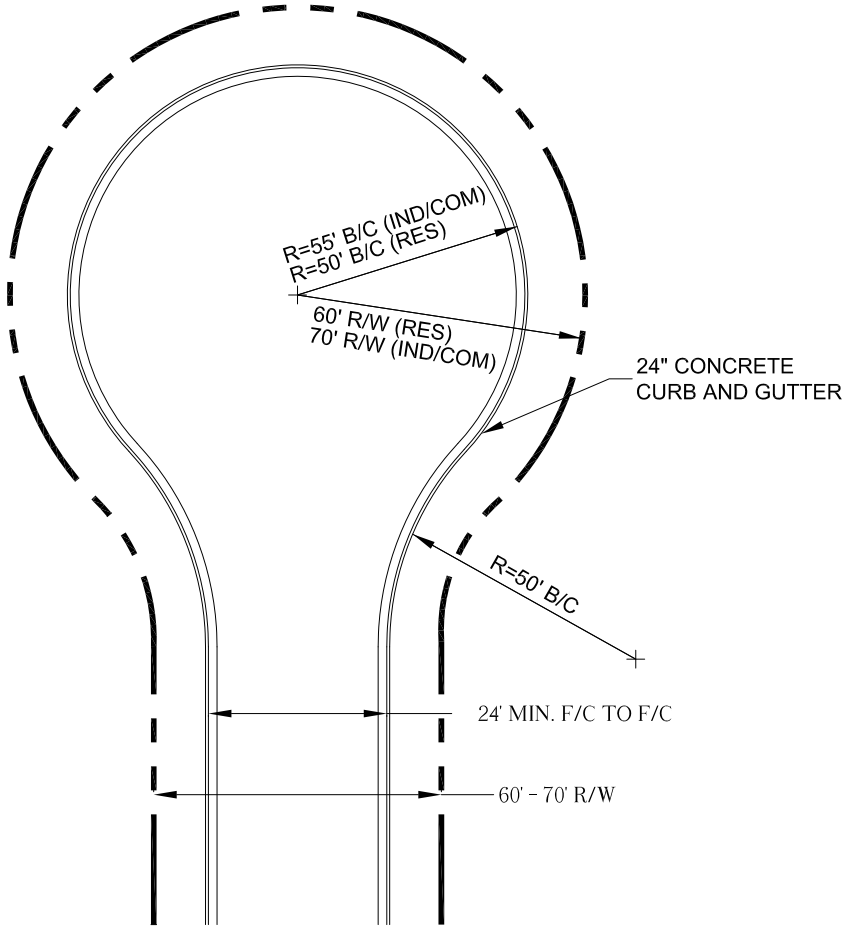

RESIDENTIAL STREET

1 1/2"	HMA SURFACE
2"	HMA BINDER
4"	HMA BASE
2"	COMPACTED AGGREGATE (AS REQ'D)
OR	6" CONCRETE
2"	COMPACTED AGGREGATE 2' BEYOND CURB & GUTTER OR E.O.P. (AS REQ'D)

(MIN. REQUIREMENTS SHOWN)

COMMERCIAL/INDUSTRIAL/PRIMARY STREET

1 1/2"	HMA SURFACE
3"	HMA BINDER
7"	HMA BASE
3"	COMPACTED AGGREGATE (AS REQ'D)
OR	9" CONCRETE
3"	COMPACTED AGRREGATE 2' BEYOND CURB & GUTTER OR E.O.P. (AS REQ'D)

NOTE:
ANY CHANGES OR ALTERATIONS MUST BE APPROVED BY THE DEPARTMENT OF PUBLIC WORKS AND UTILITIES

City of Elkhart

PUBLIC WORKS & UTILITIES
ENGINEERING DEPARTMENT

TITLE: TYPICAL CUL-DE-SAC DETAIL

DRAWN BY: JJS	DATE: 02/11/14	SCALE: N.T.S.	DRAWING NO. 6-7

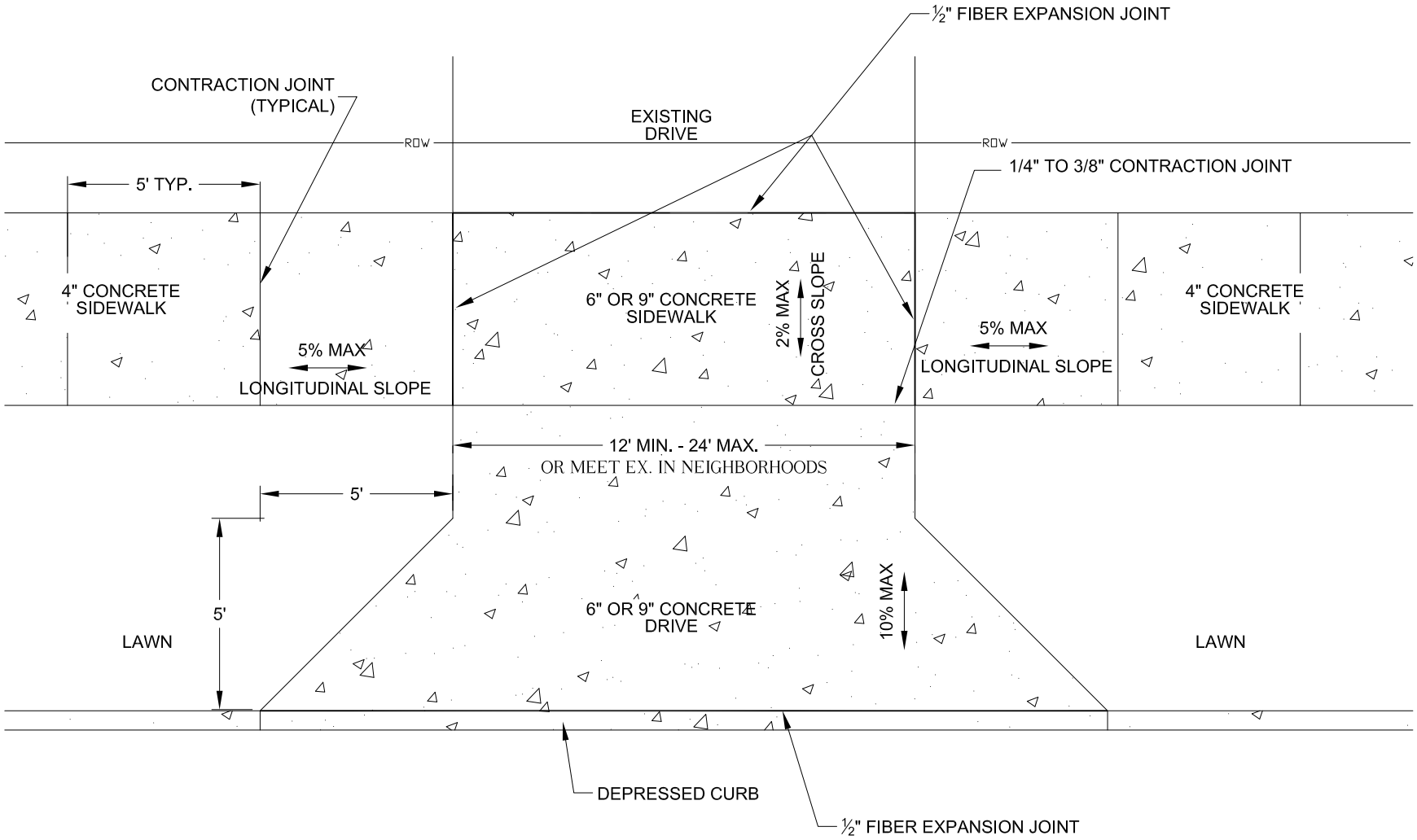

City of Elkhart

PUBLIC WORKS & UTILITIES
ENGINEERING DEPARTMENT

TITLE: TYPICAL DRIVE DETAIL - A

DRAWN BY: JJS	DATE: 02/11/14	SCALE: N.T.S.	DRAWING NO. 6-8

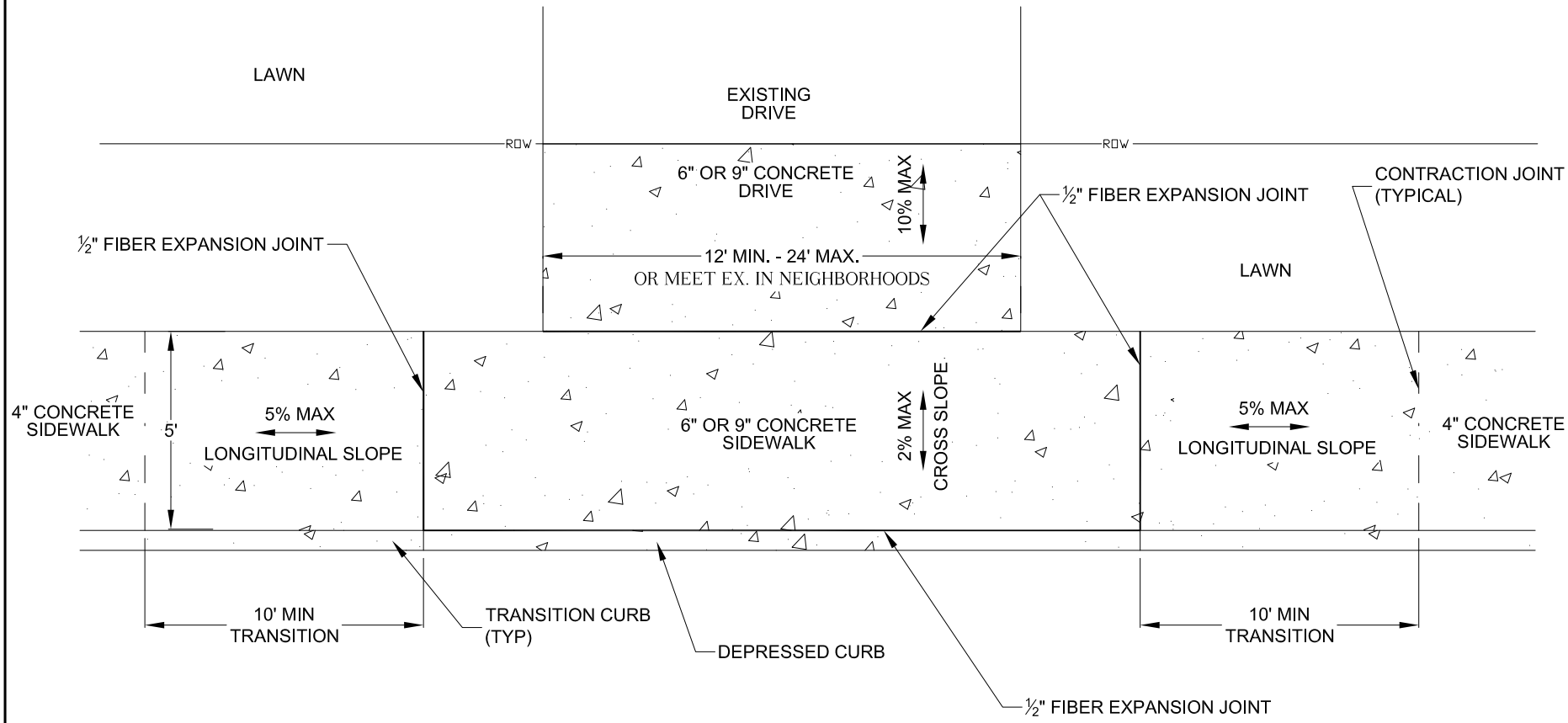

City of Elkhart

PUBLIC WORKS & UTILITIES
ENGINEERING DEPARTMENT

TITLE: TYPICAL DRIVE DETAIL - B

DRAWN BY: JJS	DATE: 02/11/14	SCALE: N.T.S.	DRAWING NO. 6-9

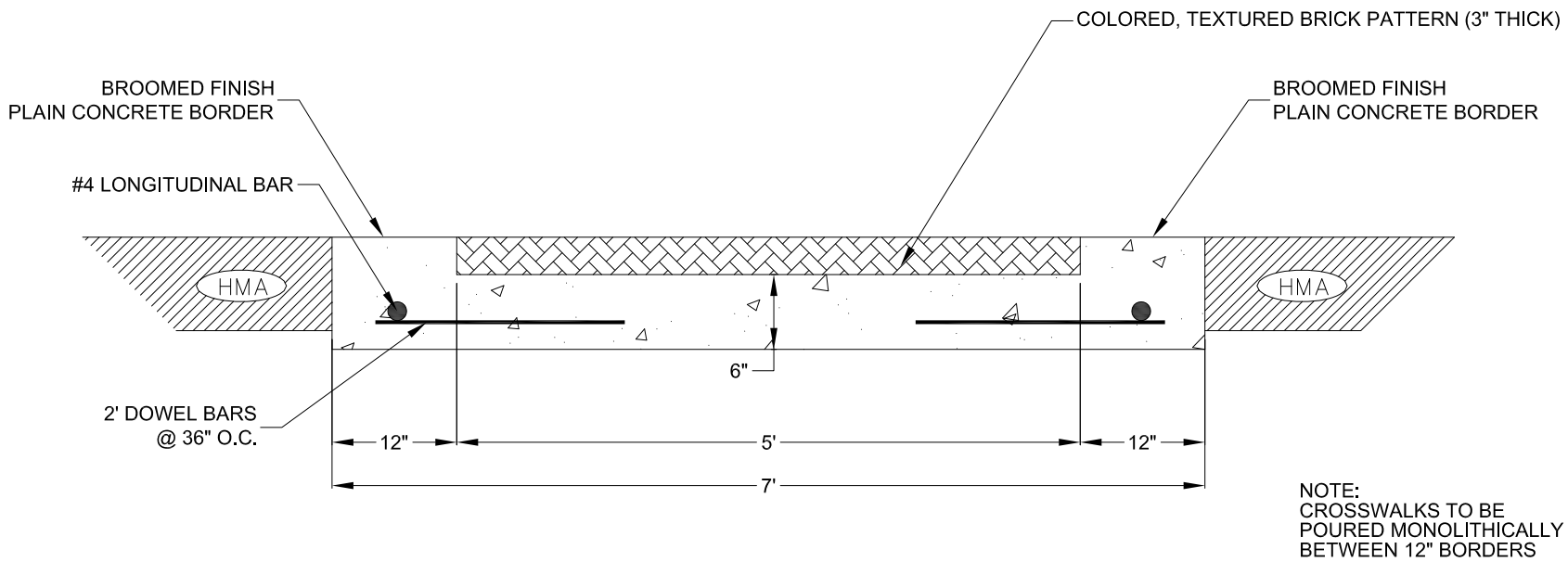

NOTE:
CROSSWALKS TO BE
POURED MONOLITHICALLY
BETWEEN 12" BORDERS

City of Elkhart

PUBLIC WORKS & UTILITIES
ENGINEERING DEPARTMENT

TITLE: TYPICAL IMPRINTED CONCRETE CROSSWALK

DRAWN BY: JJS	DATE: 02/11/14	SCALE: N.T.S.	DRAWING NO. 6-10

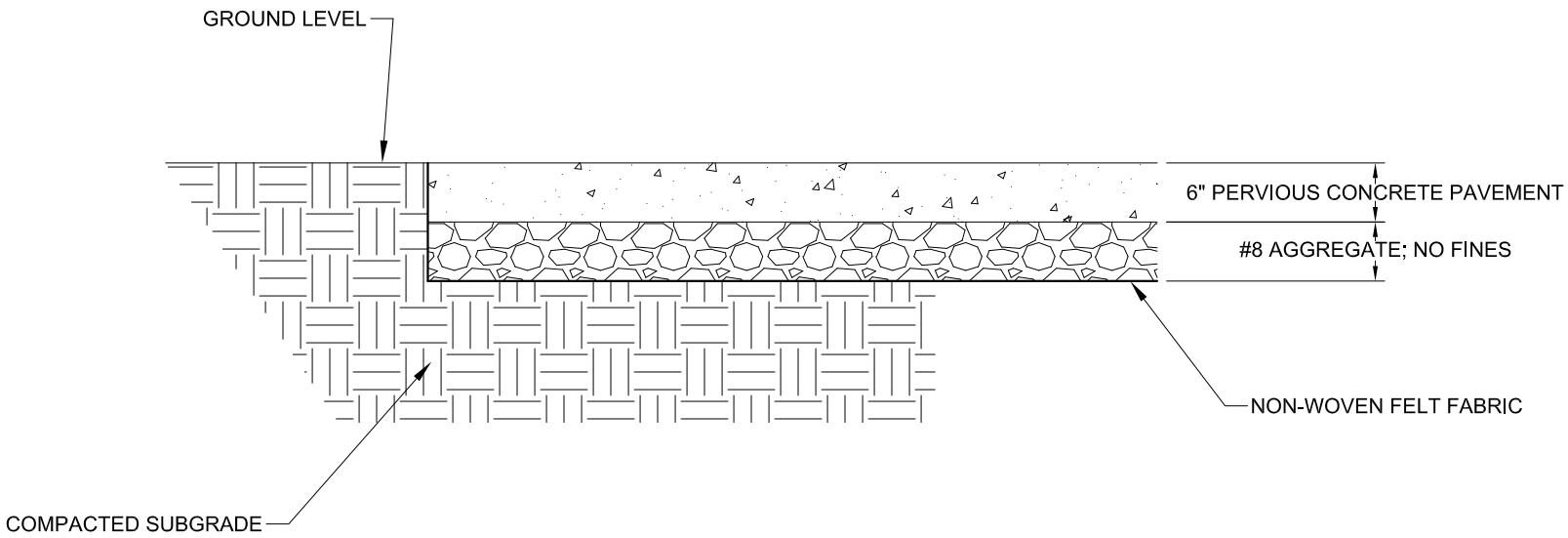

City of Elkhart

PUBLIC WORKS & UTILITIES
ENGINEERING DEPARTMENT

TITLE: PERVIOUS CONCRETE DETAIL

DRAWN BY: JJS	DATE: 02/05/16	SCALE: N.T.S.	DRAWING NO. 6-11

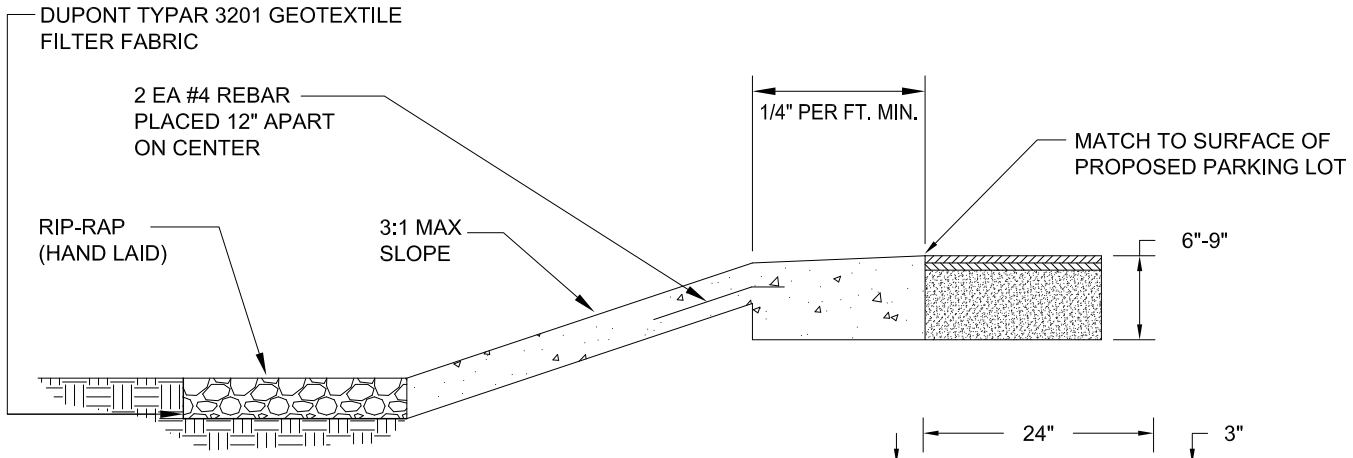

SECTION A-A
N.T.S.

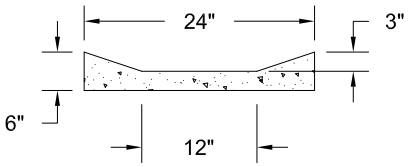

SECTION B-B
N.T.S.

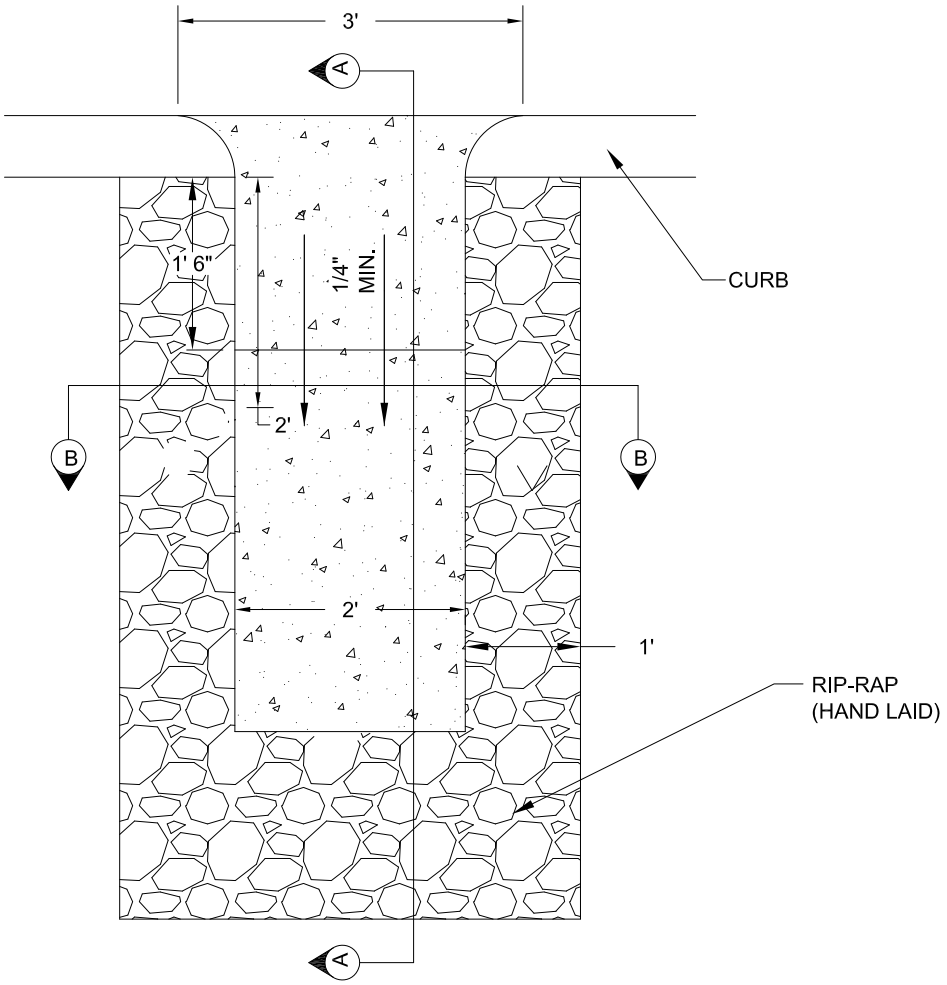

PUBLIC WORKS & UTILITIES
ENGINEERING DEPARTMENT

City of Elkhart

TITLE:
CURB TURNOUT DETAIL

DRAWN BY: JJS	DATE: 02/11/14	SCALE: N.T.S.	DRAWING NO. 7-1

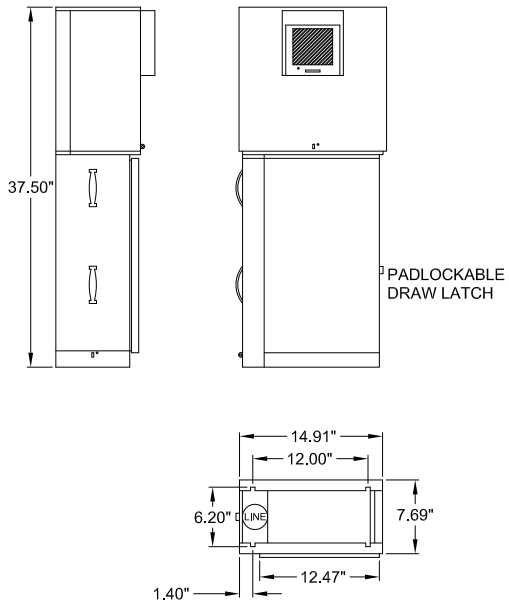

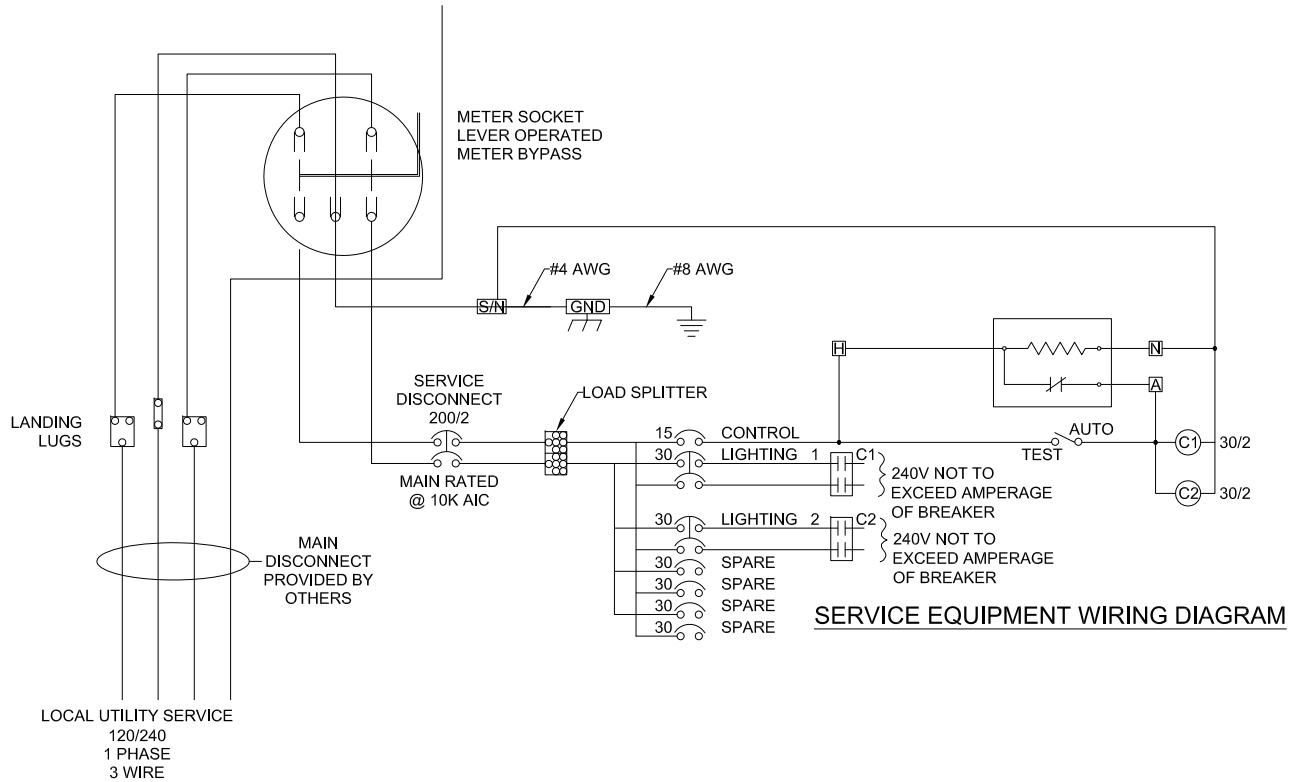

SERVICE EQUIPMENT WIRING DIAGRAM

ENCLOSURE CONSTRUCTION NOTES

1. EXTERIOR, ⅛" ALUMINUM, AND INFERIOR 14 GA COLD ROLLED STEEL ELECTRICALLY WELDED AND REINFORCED WHERE REQUIRED.
2. CONSTRUCTION WILL BE NEMA 3R, RAINTIGHT.
3. ALL NUTS, BOLTS AND SCREWS WILL BE STAINLESS STEEL.
4. NUTS, BOLTS AND SCREWS WILL NOT BE VISIBLE FROM OUTSIDE OF ENCLOSURE.
5. NAMEPLATES WILL BE PROVIDED AS REQUIRED.
6. CONTROL WIRING WILL BE MARKED AT BOTH ENDS BY PERMANENT WIRE MARKERS.
7. ENCLOSURE WILL BE FACTORY WIRED AND CONFORM TO REQUIRED NEMA AND UL 506A STANDARDS.
8. COLOR TO BE: DOG, "DARK OLIVE GREEN"
9. TESCO UNIT

**NOTE: LOAD CURRENT FOR ALL BREAKER NOT TO EXCEED 80% OF BREAKER AMPERAGE.

City of Elkhart

PUBLIC WORKS & UTILITIES
ENGINEERING DEPARTMENT

TITLE: TYPICAL TRAFFIC SIGNAL SERVICE

DRAWN BY: JJS	DATE: 02/11/14	SCALE: N.T.S.	DRAWING NO. 8-1

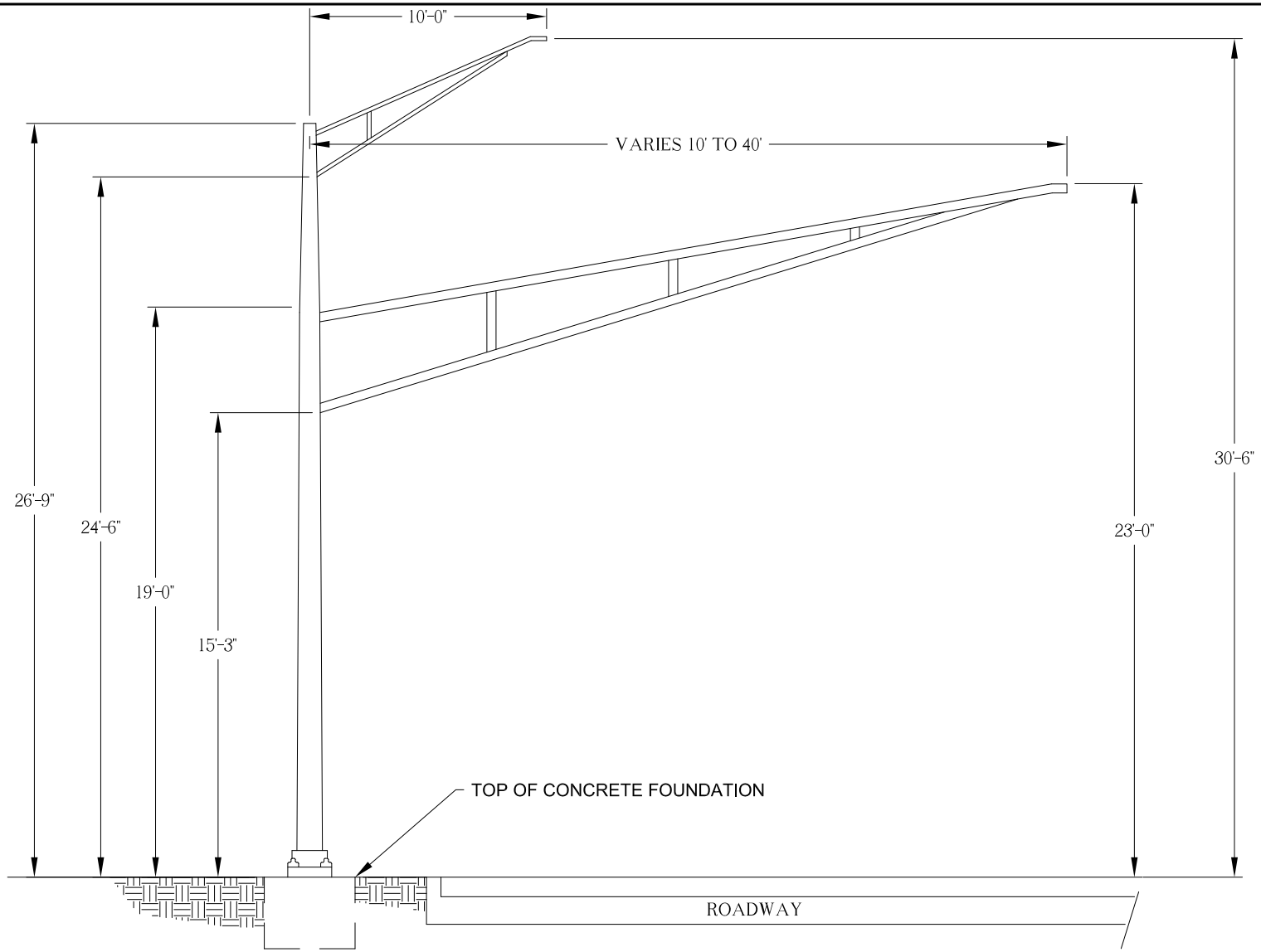

NOTE:
ANY CHANGES OR ALTERATIONS MUST
BE APPROVED BY THE DEPARTMENT
OF PUBLIC WORKS AND UTILITIES

City of Elkhart	CITY OF ELKHART PUBLIC WORKS & UTILITIES	TITLE: TYPICAL SIGNAL MAST ARM & POLE		
		DRAWN BY: JJS	DATE: 02/11/14	SCALE: N.T.S.	DRAWING NO. 8-2

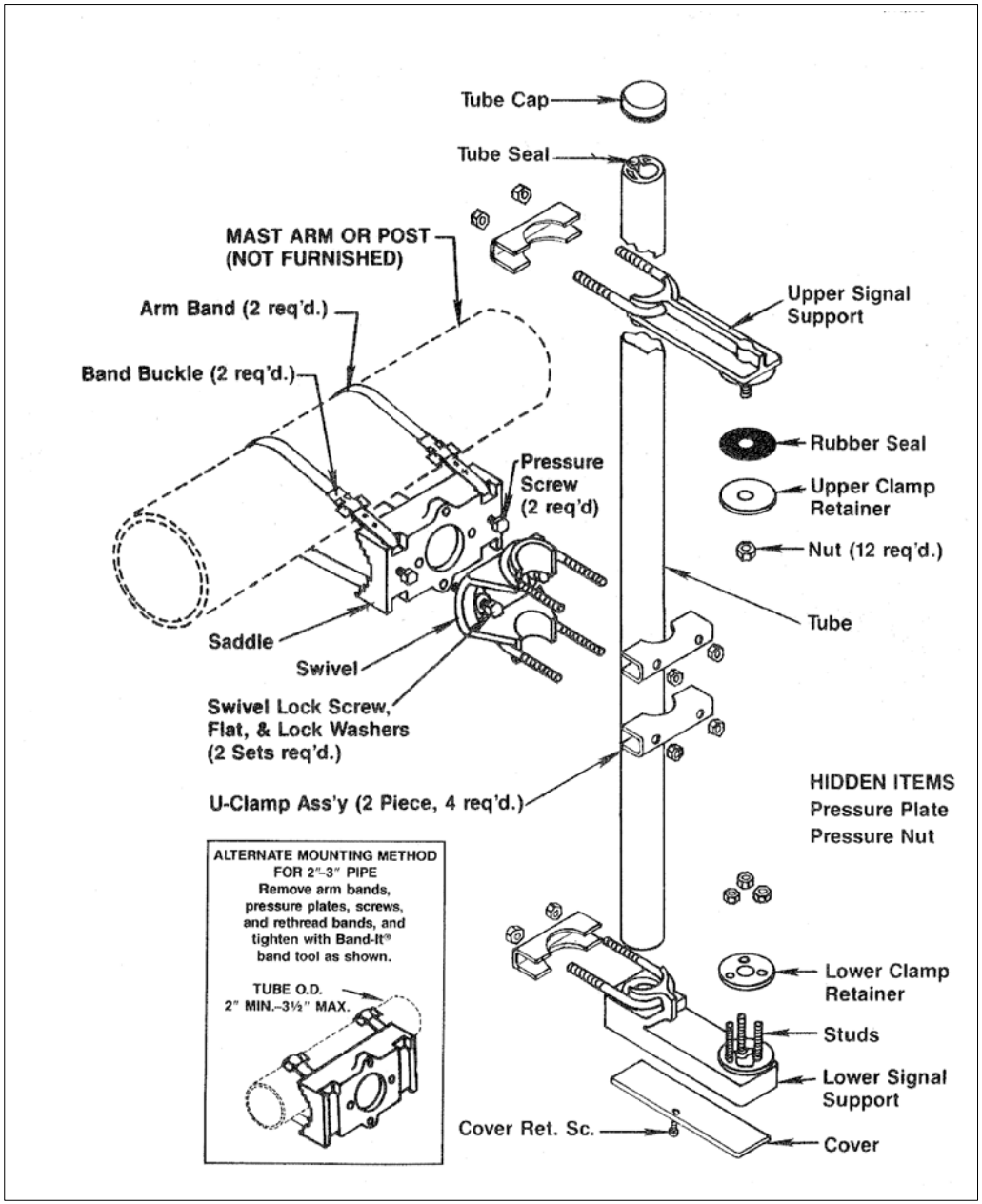

NOTES:

EQUIVALANT BRACKETS MAY BE USED WITH APPROVAL OF THE TRAFFIC DEPT. OF ELKHART

City of Elkhart	CITY OF ELKHART PUBLIC WORKS & UTILITIES	TITLE: Signal Head Bracket Detail		
		DRAWN BY: JJS	DATE: 02/11/14	SCALE: N.T.S.	DRAWING NO. 8-3

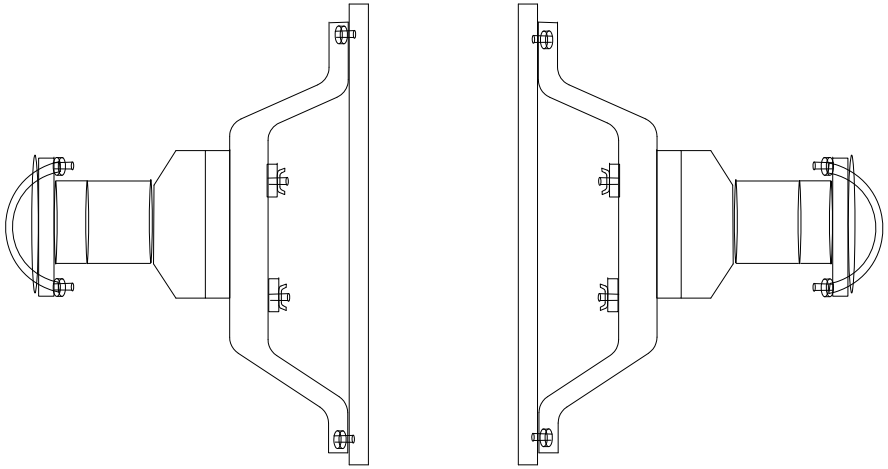

Sign Hardware Required:
(2) 5/16" x 3/4" Hex Hd. Cap Screw
(2) 5/16" Flat Washer
(2) 5/16" Lockwasher
(2) 5/16" Hex Nut

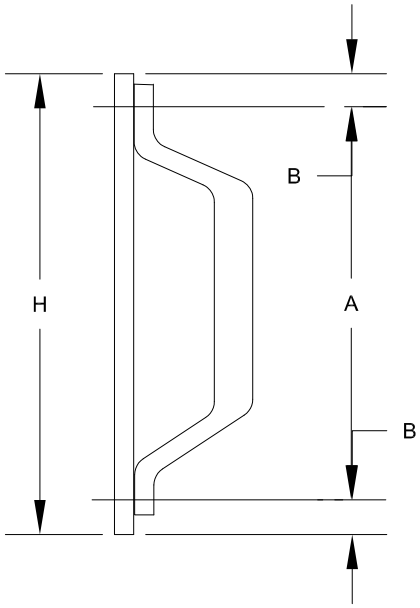

SIGN SIZE		
"H"	"A"	"B"
24"	18"	3"
30"	24"	3"
36"	30"	3"
48"	42"	3"

CITY OF ELKHART
PUBLIC WORKS & UTILITIES

TITLE: SIGN MOUNT DETAIL

DRAWN BY: JJS	DATE: 02/11/14	SCALE: N.T.S.	DRAWING NO. 8-4

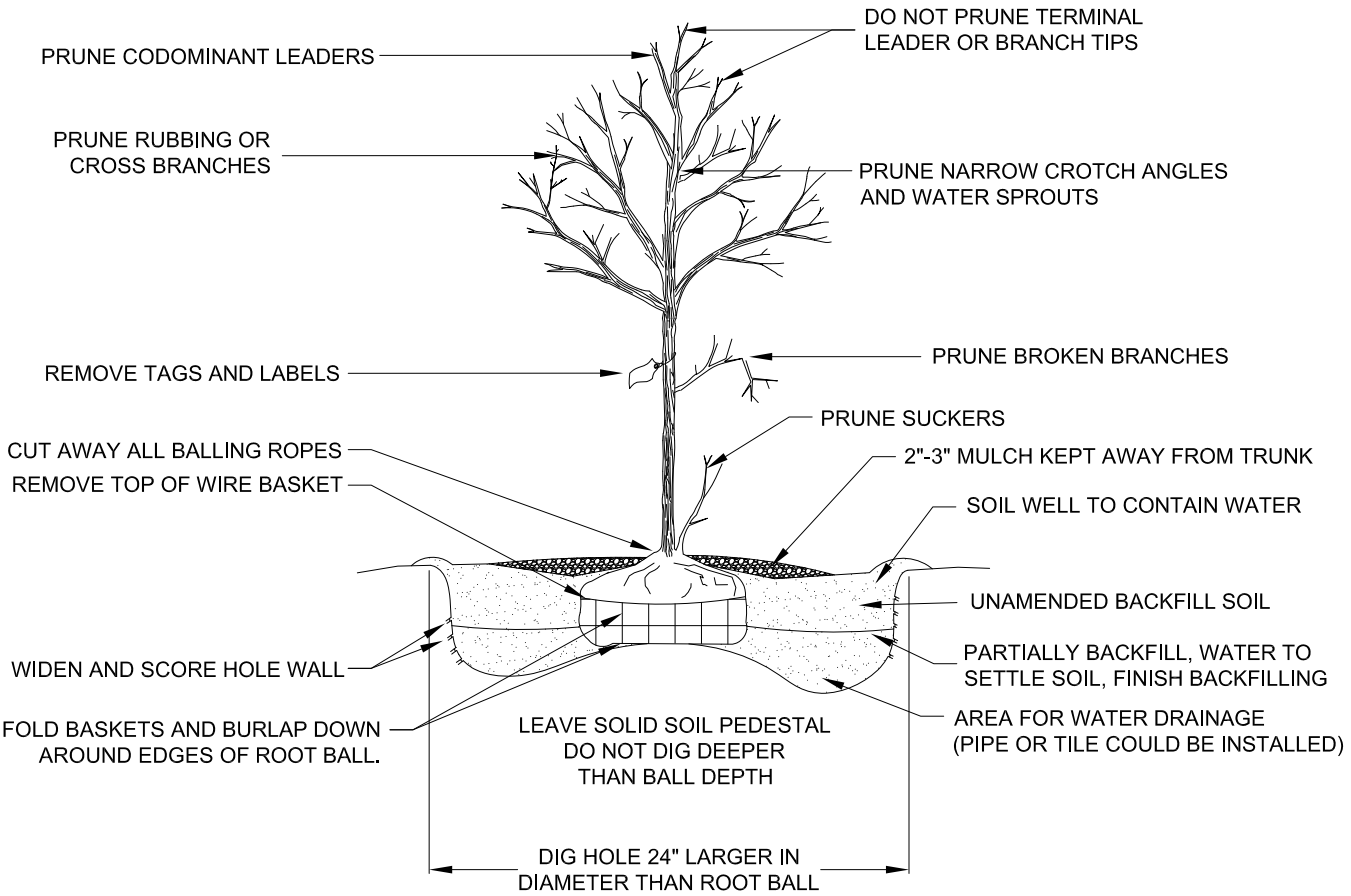

NOTE:
DO NOT STAKE OR WRAP

City of Elkhart

PUBLIC WORKS & UTILITIES
ENGINEERING DEPARTMENT

TITLE: TREE PLANTING

DRAWN BY: JJS	DATE: 02/11/14	SCALE: N.T.S.	DRAWING NO. 9-1

RECORD DRAWINGS SHALL DENOTE:

- TYPE (MH, CB, CO, DRY WELL, ETC) AND MATERIAL
- RIM; INVERT ELEVATIONS; DIAMETER OF STRUCTURE, IF NOT STANDARD; AND SUMP DEPTH FOR CATCH BASINS
- INVERT DIRECTION
- PIPE DIAMETER, MATERIAL AND SLOPE.
- SANITARY OR STORM
- LATERAL LENGTH; PIPE MATERIAL; DIAMETER; DISTANCE FROM DOWNSTREAM MANHOLE; DEPTH AT RIGHT-OF-WAY; ACTIVE/INACTIVE AT INSTALLATION;

PLAN DENOTATIONS SHALL BE STRUCK THROUGH AND THE AS-BUILT INFORMATION NOTED IN **BOLD**. IF PLAN DENOTATION IS ACCURATE, IT SHALL BE CIRCLED.

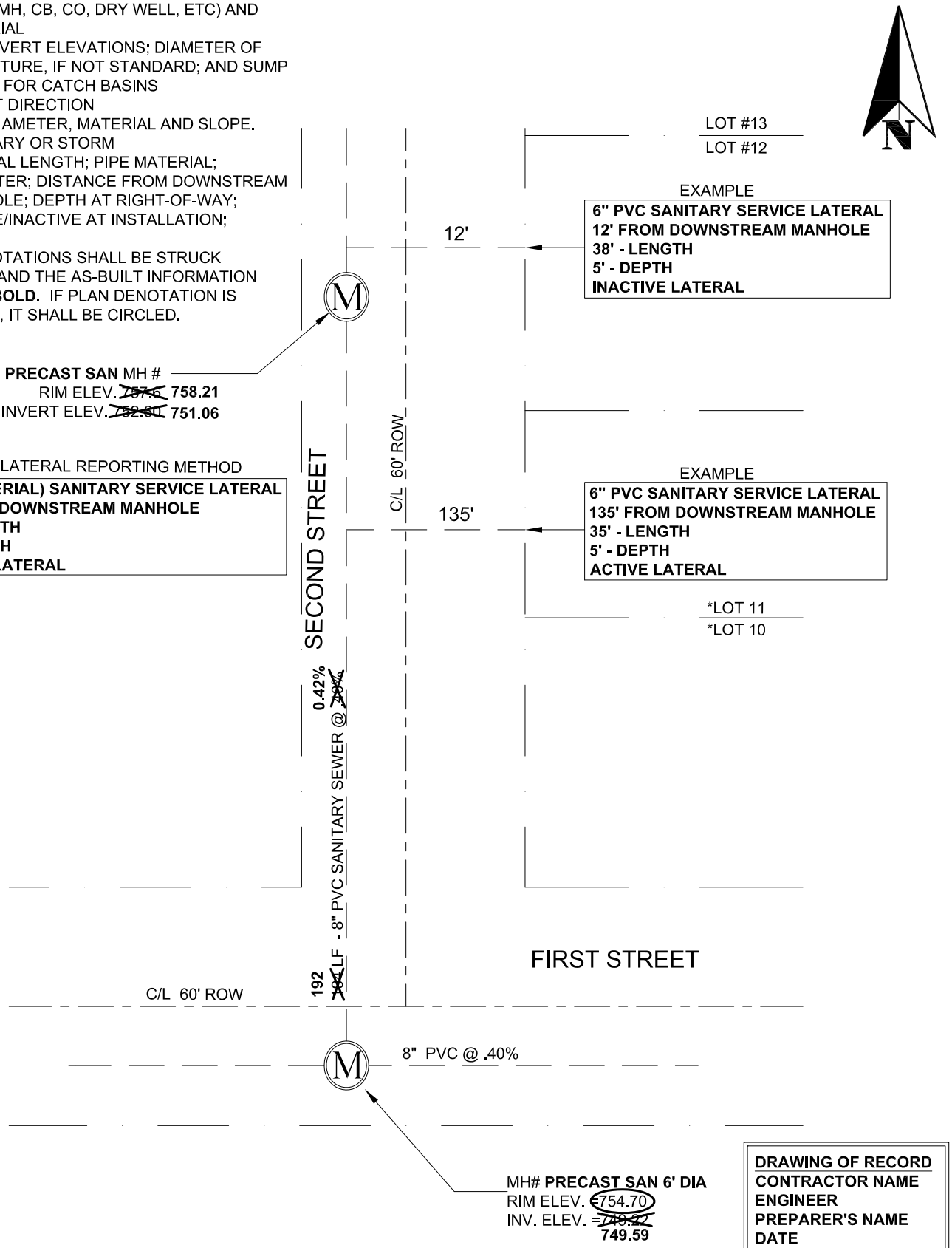

DRAWING OF RECORD
CONTRACTOR NAME
ENGINEER
PREPARER'S NAME
DATE
CITY JOB #

City of Elkhart

PUBLIC WORKS & UTILITIES
ENGINEERING DEPARTMENT

TITLE:
EXAMPLE RECORD DRAWING FOR LATERAL LOCATION

DRAWN BY: JJS	DATE: 02/11/14	SCALE: N.T.S.	DRAWING NO. 11-1

RECORD DRAWINGS SHALL DENOTE:

- DIAMETER AND MATERIAL
- LENGTH BETWEEN VALVES AND FITTINGS
- HYDRANT MAKE, MODEL, AND LOCATION (LOT/ADDRESS)
- VALVE SIZE AND LOCATION OFF NEAREST TWO STREET CENTERLINES
- FITTINGS LOCATION OFF NEAREST TWO STREET CENTERLINES OR PARCEL LINES.
- SERVICE SIZE; LENGTH; MATERIAL; LOCATION FROM STREET CENTERLINE TO CURB STOP AND NEAREST PARCEL LINE.

PLAN DENOTATIONS SHALL BE STRUCK THROUGH AND THE AS-BUILT INFORMATION NOTED IN **BOLD.** IF PLAN DENOTATION IS ACCURATE, IT SHALL BE CIRCLED.

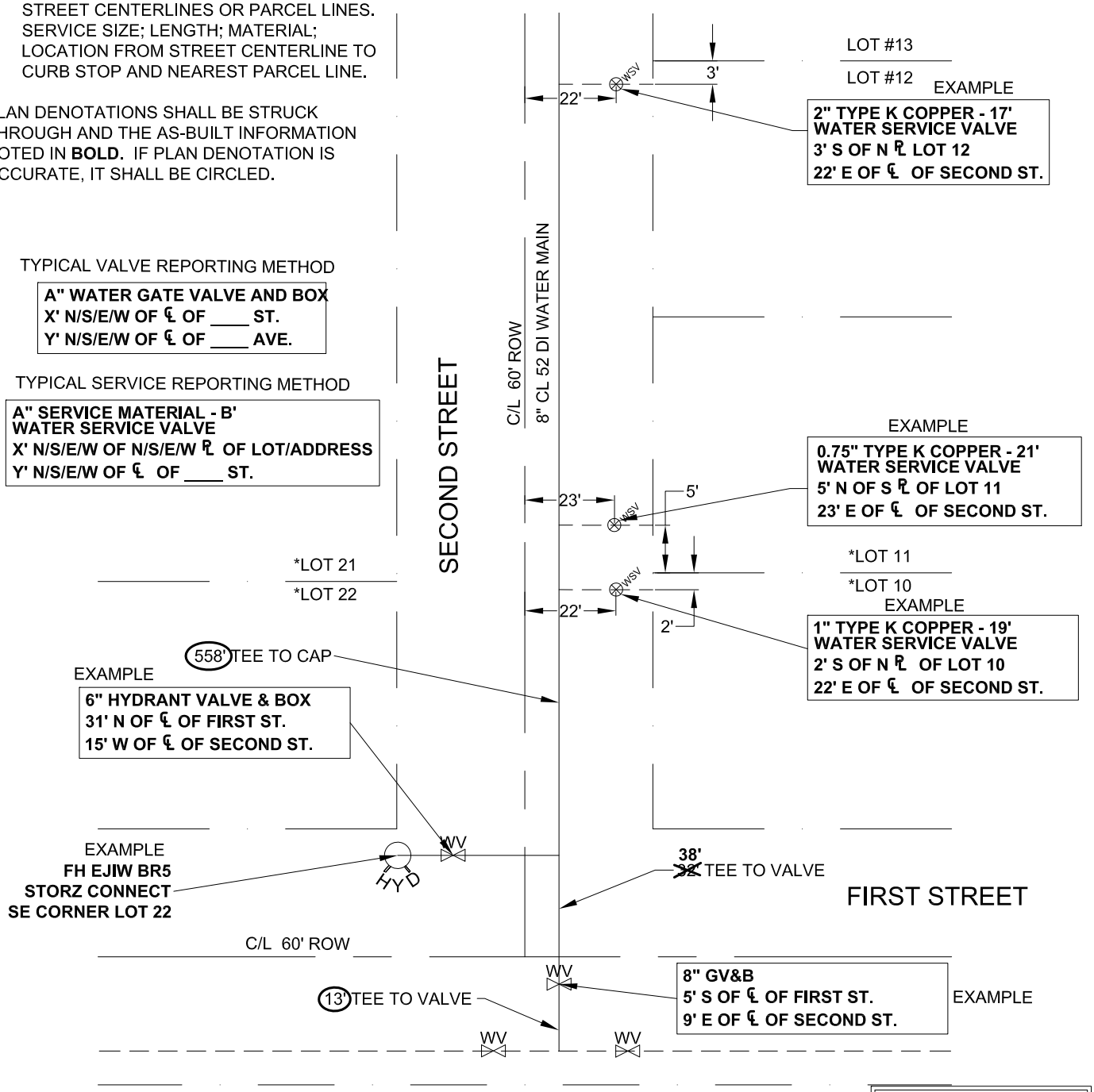

DRAWING OF RECORD
CONTRACTOR NAME
ENGINEER
PREPARER'S NAME
DATE
CITY JOB #

City of Elkhart

PUBLIC WORKS & UTILITIES
ENGINEERING DEPARTMENT

TITLE:
EXAMPLE RECORD DRAWING FOR SERVICE VALVE LOCATION

DRAWN BY: JJS	DATE: 02/11/14	SCALE: N.T.S.	FIGURE NO: 11-2